DS03

Variable Area Flowmeter and Switch

- **for low viscosity liquids and gases**
- **small mounting dimensions**
- **brass (nickel plated) or stainless steel version**
- **high switching accuracy**
- **scales burned into the sight glass**
- **optional Ex- version acc. to ATEX**
- **analogue transmitter 4...20 mA optional**
- **P_{max}: 10 bar, T_{max}: 160 °C**

Description:

The flowmeter and switch model DS03 works according to a modified variable area principle. The float is guided in an upward tapered measuring tube. The flowing medium moves the float in the flow direction. The upper edge of the float shows the momentary flow via a burnt in scale on the measuring glass.
A Reed contact is mounted outside the meter in a sealed housing. When the float reaches the position of the Reed contact the switch will close. With higher flows the float moves further upward until it reaches a built-in float stop, still keeping the switch closed. This ensures a bistable switch function at any time. The Reed contact is adjustable over the full measuring range of the meter.

Typical application:

The variable area flowmeters and monitors DS03 are used to measure and monitor continuous flow rates of low-viscosity liquids or gaseous media.

Areas of applications are:

- cooling systems
- engineering
- medical technology
- pharmaceutical and chemical industries
- research and development

PKP Prozessmesstechnik GmbH
Borsigstr. 24 • D-65205 Wiesbaden
+49 (0) 6122-7055-0 • +49 (0) 6122 7055-50
info@pkp.de • www.pkp.de

Models:

Measuring ranges:

water: 0,1...1,5 l/min – 4...50 l/min
air: 3...30 Nl/min – 200...1600 Nl/min
(referenced to 1 bar abs, 20°C)

Materials: brass (nickel plated) and stainless steel

Technical Data:

Max. pressure: 10 bar

Pressure loss: 0,01–0,2 bar

Max. media-temperature: 100 °C for liquids (optional 160 °C)
80 °C for gases,
Ex-devices acc. to. ATEX-marking

Electr. Connection: angle plug acc. to EN 155301-803, form A (DIN 43650),
Ex-contact with 2 m cable
optional: cable connection
round plug M12 x 1 acc. to EN 50044
angle plug with LED or glow lamp

Accuracy: ± 5 % FS (liquids)
± 10 % FS (gases)

Mounting position: vertical

Materials:

Protective housing: (non-wetted parts) aluminium anodized

Brass version (nickel-plated):

Wetted parts:
float: stainless steel 1.4571 (for liquids)
POM (for gases)
sight glass: borosilicate glass
gaskets: NBR, optional FKM, EPDM

all other wetted parts: brass, nickel plated

Stainless steel version (1.4571):

Wetted parts:
float: stainless steel 1.4571 (for liquids)
POM (for gases)
sight glass: borosilicate glass
gaskets: FKM, optional NBR, EPDM

all other wetted parts: stainless steel1.4571

Order Code:

Order number: DS03. | 3. | 1. | 1. | WA06. | 1. | 1. | 0

Variable area flowmeter- and switch

Connection female thread:
1 = G 1/4 — 1N = 1/4“ NPT
1A = G 3/8 — 1AN = 3/8“ NPT
2 = G 1/2 — 2N = 1/2“ NPT
3 = G 3/4 — 3N = 3/4“ NPT
4 = G 1 — 4N = 1“ NPT

Material:
1 = brass nickel-plated
2 = stainless steel 1.4571

Scale:
1 = for water
2 = for air (at 1 bar abs., 20 °C)

Measuring ranges:

Water:	Air:
DS03.1, DS03.1A und DS03.2:	
WA01 = 0,1–1,5 l/min	LA01 = 3–30 Nl/min
WA02 = 0,2 –3 l/min	LA02 = 6–60 Nl/min
WA03 = 0,3–8 l/min	LA03 = 6–160 Nl/min
WA04 = 1–12 l/min	LA04 = 20 –220 Nl/min
DS03.2 und DS03.3:	
WA05 = 2 –18 l/min	LA05 = 40 –360 Nl/min
DS03.3 und DS03.4	
WA06 = 3–35 l/min	LA06 = 60–700 Nl/min
WA07 = 4–50 l/min	LA07 = 60–825 Nl/min
only DS03.4	
	LA08 = 200 –1600 Nl/min

Addition S...= special scale

Number of contacts:
0 = without contact
1 = 1 contact
2 = 2 contacts

Contact function / analogue output:
0 = without
1 = N/O
2 = SPDT
2X = SPDT for SPS application
3ST5 = Ex-N/O, T5 (100 °C), with 2 m cable (not for air)
3ST6 = Ex-N/O, T6 (80 °C), with 2 m cable
3UT5 = Ex-SPDT, T5 (100 °C), with 2 m cable (not for air)
3UT6 = Ex-SPDT, T6 (80 °C), with 2 m cable
SU20 = analogue transmitter 4...20 mA and 0...10 V

Options:
0 = without
1 = please specify in plain text
HT = high temperature version 160 °C (only for liquids)
M12 = round plug M12 x 1 acc. to EN 50044 (Tmax. 85 °C)
Kx = cable version 1 m, 2 m, 5 m or 10 m

Dimensions:

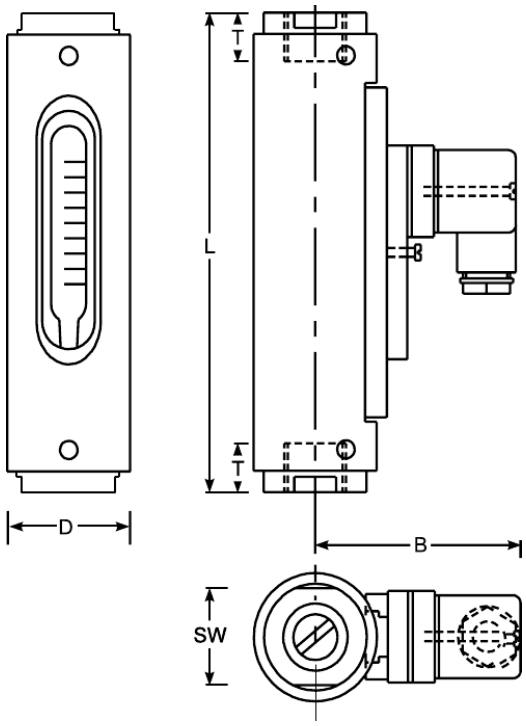

Dimensions:

Measu-ring range	Dimensions [mm]						Weight appr.[g]
	G	D	B	SW	T	L	
01	1/4“	43	74	32	10	132	800
	3/8“				15	135	
	1/2“				14		
02	1/4“	43	74	32	10	132	800
	3/8“				15	135	
	1/2“				14		
03	1/4“	43	74	32	10	132	800
	3/8“				15	135	
	1/2“				14		
04	1/4“	43	74	32	10	132	800
	3/8“				15	135	
	1/2“				14		
05	1/2“	43	74	32	14	161	800
	3/4“				15	166	960
06	3/4“	50	79	41	15	163	1450
	1“				17		
07	3/4“	50	79	41	15	163	1450
	1“				17		
08	1“	50	79	41	17	163	1450

Contacts:

The contact opens/changes, if the flow level has fallen under the adjusted value

			Switching capacity		
Type	**Size**	**Contact function**	**Angle plug IP65**	**M12x1 plug IP67**	**Cable connection (1 m) IP67**
DS03.1 DS03.1A DS03.2 DS03.3 DS03.4	1/4“ 3/8“ 1/2“ 3/4“ 1“	1 = N/O	250 V / 3 A / 100 VA		
		2 = SPDT	250 V / 1,5 A / 50 VA, min. load: 3 VA		
		2X = SPDT for SPS	250 V / 1 A / 60 VA	-/-	-/-
		3ST5 = Ex-N/O, T5* 3ST6 = Ex-N/O, T6*	-/-	-/-	250 V / 2 A / 60 VA (2 m cable)
		3UT5 = Ex-SPDT, T5* 3UT6 = Ex-SPDT, T6*	-/-	-/-	250 V / 1 A / 30 VA, min load: 3 VA (2 m cable)

* Exact max. switching capacity: see ATEX documents
Air version only with T6 (T80 °C).

ATEX-designations:

Contacts 3ST5, 3ST6, 3UT5, 3UT6:

ATEX II 2 G Ex mb IIC T6 Gb, ATEX II 2 D Ex tb IIIC T80 °C Db
ATEX II 2 G Ex mb IIC T5 Gb, ATEX II 2 D Ex tb IIIC T100 °C Db
(with cable connection, Standard 2 m only)

PKP Prozessmesstechnik GmbH
Borsigstr. 24 • D-65205 Wiesbaden
+49 (0) 6122-7055-0 • +49 (0) 6122 7055-50
info@pkp.de • www.pkp.de

Analogue Transmitter SU20:

The position of a magnetic float / piston is detected by means of Hall sensors and converted into an analogue signal. .

- **analogue signal 4...20 mA and 0...10 V**
- **operating temperature: -20... +70 °C**
- **accuracy: +/- 10 % of full scale**
- **Aluminium housing, anodized**

Technical Data:

Accuracy*:	+/- 1 % of full scale
Operating temperature:	-20…+70 °C
Storage temperature:	-20...+80 °C
Repeatability:	tbd.
Housing material:	Aluminium, blue anodized
Protection class:	IP67

* The actual accuracy depends on the flow sensor used. On request the accuracy of the flow sensor used can be significantly increased by a customized calibration.

Electrical Data:

Analogue output:	4...20 mA and 0...10 V
Power supply:	24 V_{CD} (19...30 V_{DC})
Power consumption:	< 1 W
Current output:	max. load 600 Ohm
Voltage output	max. current 10 mA
Connection:	round plug M12x1, 5-pole

Notes:

Flowmeter and analogue transmitter SU20 have been optimally adjusted to each other and may not be exchanged.

Electrical Connection:

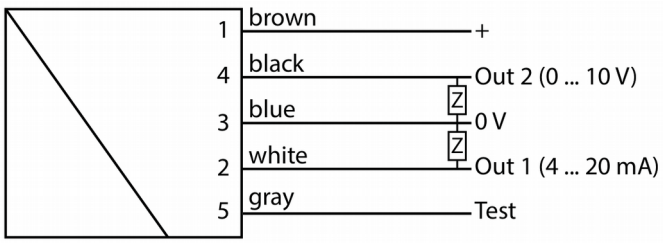

Attention: Pin 5 must not be electrically connected! We strongly recommend use of a four core cable.

Dimensions:

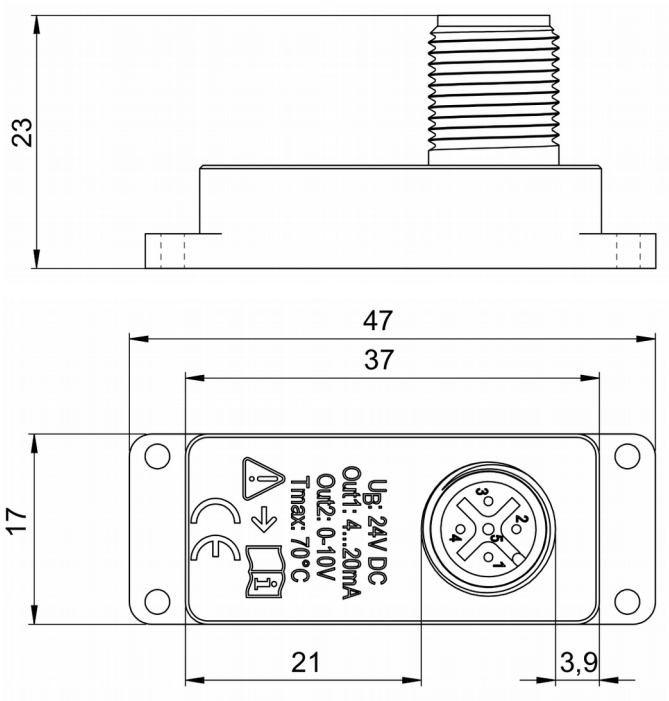

Characteristics:

Current-Flow characteristic:

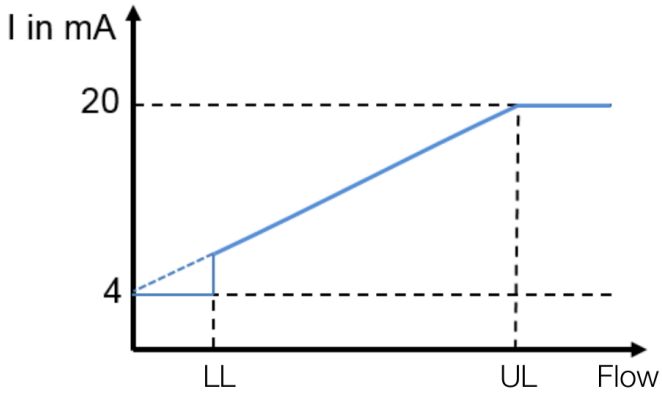

Voltage-Flow characteristic:

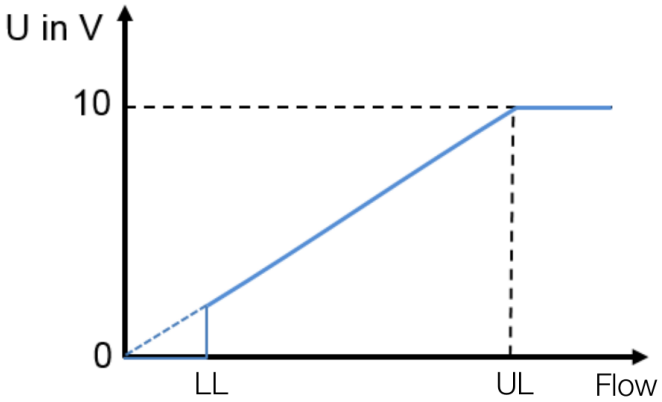

LL: lower limit of measuring range
UL: upper limit of measuring range

PKP Prozessmesstechnik GmbH
Borsigstr. 24 • D-65205 Wiesbaden
+49 (0) 6122-7055-0 • +49 (0) 6122 7055-50
info@pkp.de • www.pkp.de

Accessories (see separate data sheets):

- **Needle valves SNV01, SNV02**

- **Ball valves SKG01, SKG02**

- **Dirt traps SF00, SF01**

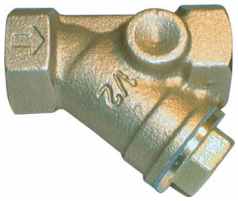

- **Protection relay MSR01**

- **M12 Plug connector PVC-cable SM12**

Notes:

The specified measuring/switching ranges apply when the instrument is installed vertically and the flow rate is from bottom to top.
Other installation positions or operating densities deviating from the specified specifications increase the specified measuring error.

Special scales for different media and operating conditions are available on request.

The specified switching points are shut-off points at falling flow rates. Please note that the switch-on points are higher due to the hysteresis.

For applications where pressure surges are to be expected, please contact PKP!

PKP Prozessmesstechnik GmbH
Borsigstr. 24 • D-65205 Wiesbaden
+49 (0) 6122-7055-0 • +49 (0) 6122 7055-50
info@pkp.de • www.pkp.de