Instruction Manual

TSA20.A

Electronic temperature sensor with LED-display

PKP Prozessmesstechnik GmbH
Borsigstraße 24
D-65205 Wiesbaden-Nordenstadt
Tel.: ++49-(0)6122-7055-0
Fax: ++49-(0)6122-7055-50
Email: info@pkp.de

Table of content

1 General

1.1 For Information

- These operation instructions contain important information on handling the resistance thermometer. Working safely requires that all safety instructions and work instructions are observed .
- Skilled personnel must have carefully read and understood the operating instructions prior to beginning any work.
- The operating instructions are part of the product and must be kept in the immediate vicinity of the resistance thermometer and readily accessible to skilled personnel at any time.
- Observe the relevant local accident prevention regulations and general safety regulations for the resistance thermometer‘s range of use.
- If the serial number gets illegible (e. g. by mechanical damage), the retraceability of the instrument is not possible any more.
- The temperature sensors, described in this operating manual, are carefully designed and manufactured using state-of-the-art technology. Every component undergoes strict quality inspection in all stages of manufacture.
- The manufacturer‘s liability is void in the case of any damage caused by using the product contrary to its intended use, non-compliance with these operating instructions, unauthorised modifications to the resistance thermometer or assignment of insufficiently qualified skilled personnel.

1.2 Signs, abbreviations

Warning!
A non-observance can cause injuries to persons and/or the demolition of the device.
There can be a dangerous to life.

Attention!
A non-observance can cause a faulty operation of the device or lead to property damage.

Information!
A non-observance can have influence on the operation of the device or cause unintentional reactions of the device.

Danger!
When not observing the safety instructions, there is a risk of serious or fatal injuries caused by electrical power.

Warning!
Possibly a dangerous situation can occur, which results in burns because of hot surfaces or liquids, if not avoided.

U+:	Positive supply connection
U-:	Negative supply connection
SP1:	Switching point 1
SP2:	Switching point 2

2 Transport, Packaging, Storage

2.1 Transport

Check the instrument for any damage that may have been caused during transportation. If, report them immediately.

2.2 Packaging

Do not remove packaging until just before mounting. Keep the packaging as it will provide optimum protection during transport (e.g. change in installation site, sending back).

2.3 Storage

For longer term storage avoid the following influences:

- Direct sunlight or proximity to hot objects
- Mechanical vibration, mechanical shock (putting it hard down)
- Soot, vapour, dust and corrosive gases

If possible store the device in its original package or an equivalent one

3 For your safety

Warning

Before installation, commissioning and operation ensure that the appropriate resistance thermometer has been selected in terms of measuring range, design, specific measuring conditions and appropriate wetted parts materials (corrosion).

More important safety instructions can be found in the individual chapters.

3.1 Intended use of the product

The resistance thermometer TSA20.A is used for the measurement of temperatures from -50...200 °C in liquid and gaseous media. It can be used for pressures up to 25 bar.

The sensor has been designed and built solely for the intended use described here and may only be used accordingly.

The technical specifications contained in these operating instructions must be observed. Improper handling or operation of the instrument outside of its technical specifications requires the instrument to be taken out of service immediately and an inspection by the manufacturer.

When the instrument is transported from a cold into a warm environment, the formation of condensation may result in the instrument malfunctioning. Before putting it back into operation, wait for the instrument temperature and the room temperature to equalise.

The manufacturer shall not be liable for claims of any type based on operation contrary to the intended use.

3.2 Personnel qualification

Warning

Risk of injury if qualification is insufficient

Improper handling can result in considerable injury and damage to equipment.

- The activities described in these operating instructions may only be carried out by skilled personnel who have the qualifications described below.
- Keep unqualified personnel away from hazardous areas.

For installation and starting of the temperature sensor the personnel has to be familiar with the relevant regulations and directives of the country and must have the qualification required. They must have knowledge on measurement and control technology, have to be acquainted with electric circuits, are capable of carrying out the work described and can independently recognise potential hazards. Depending on the operation conditions of the application they have to have the corresponding knowledge, e.g. of aggressive media.

3.3 Special hazards

Warning

For hazardous media such as oxygen, acetylene, flammable or toxic gases or liquids, refrigeration plants, compressors, etc., in addition to all standard regulations, the appropriate existing codes or regulations must also be followed.

If you do not observe the appropriate regulation, serious injuries and/or damage can occur!

Warning

A protection from electrostatic discharge (ESD) is required.
The proper use of grounded work surfaces and personal wrist straps is required when working with exposed circuitry (PCB, printed circuit boards), in order to prevent static discharge from damaging sensitive electronic components.

Danger

There is a danger of death caused by electric current.
Upon contact with life parts, there is a direct danger of death.

Electrical instruments may only be installed and connected by skilled electrical personnel.

Operation using a defective power supply unit (e.g. short circuit from the mains voltage to the voltage output) can result in life-threatening voltages at the instrument.

Warning

Residual media in dismounted instruments can result in a risk to personnel, the environment and equipment. Take sufficient precautionary measures.

Do not use this instrument in safety or Emergency Stop devices. Incorrect use of the instrument can result in injury.

Should a failure occur, aggressive media with extremely high temperature and under high pressure or vacuum may be present at the instrument.

4 Starting, operation

4.1 Function

The TSA20.A is fitted directly into the process via thread of the process connection. A change in resistance of the sensor element in the tip of the protecting tube is transformed into an electrical standard signal by a measuring amplifier. The signal changes proportional to the temperature and can be evaluated.

4.2 Before mounting

Check if a completely assembled temperature sensor is supplied.

Inspect the temperature sensor for possible damage during transportation. Should there be any obvious damage, inform the transport company and supplier without delay.

Keep the packaging, as it offers optimal protection during transportation.

Ensure that the process connection thread and the connection contacts will not be damaged.

4.3 Product label (example)

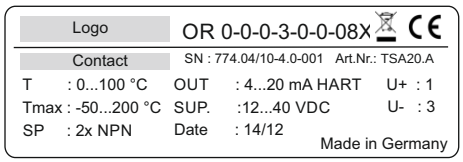

OH...	: Product code	Art.Nr.	: Part number
Tmax	: Range maximum	SN	: Serial number
T	: Temperature range	Date	: Date of QC
U+	: Supply/Loop +	OUT	: Loop signal
U-	: Supply/Loop -	SUP.	: Range of voltage
SP	: No. and kind of switch point		

4.4 Mechanical connection

Tools: wrench (flats 27), screw driver

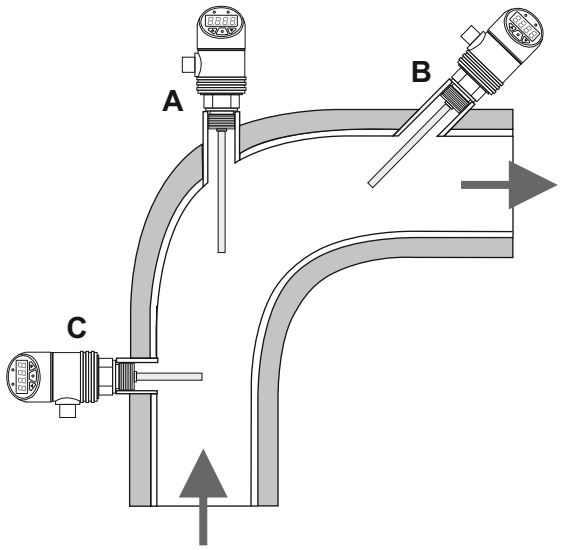

The resistance thermometers are designed for screw fitting directly into the process. The insertion length, along with the flow velocity and viscosity of the process media, may reduce the maximum loading on the protecting tube.

Installation on pipes
A: on elbows
B: in small pipes, inclined
C: perpendicular to flow direction

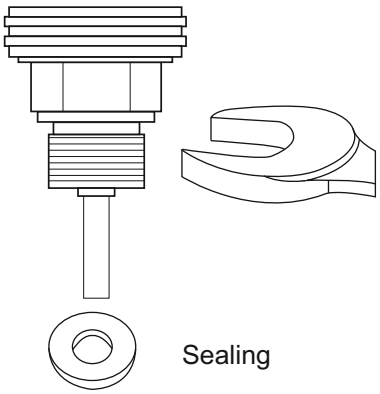

You have to provide for a sealing element which corresponds to the application.

Exceptions may be instruments with self-sealing threads (e. g. NPT thread).

When mounting the instrument, ensure that the sealing faces of the instrument and the measuring point are clean and undamaged.

Screw in or unscrew the instrument only via the flats using a suitable tool and the prescribed torque. The appropriate torque depends on the dimension of the process connection and on the sealing element used (form/material). Do not use the case as working surface for screwing in or unscrewing the instrument.

When screwing the transmitter in, ensure that the threads are not jammed.

If necessary observe information about tapped holes and welding sockets.

4.5 Electrical connection

!

Connect the instrument to earth via the process connection.

The ingress protection specified only apply while the temperature transmitter is connected with the female connectors that provide the corresponding ingress protection.

Ensure that the cable diameter you select fits to the cable gland of the connector. Ensure that the cable gland of the mounted connector is positioned correctly and that the sealings are available and undamaged. Tighten the threaded connection and check the correct position of the sealings to ensure ingress protection.

Make sure that the ends of cables with flying leads do not allow any ingress of moisture.

Route the cable without applying a force or turning moment to the device.

4.6 Pin assignment

Connection	Current loop 4...20 mA HART		Limit value contact			
	U+	U-	Common	SP 1	SP 2	
M12, 4-pole	1	3	2	4		
M12, 5-pole	1	3	5	4	2	
M12, 8-pole	1	3	5	4	2	
Super Seal, 3-pole	1	3				
Deutsch DT04, 3-pole	A	B				
Deutsch DT04, 4-pole	1	3	2	4		
Bayonet DIN, 4-pole	1	2	3	4		
Valve (L-plug), 4-pole	1	2	3	GND		
Cable, 4-pole	yellow	white	green	brown		
Cable, 6-pole	yellow	white	green	brown	grey	
MIL, 6-pole	A	C	E	D	B	

View: plug pins of male connector

M12, 4-pole	M12, 5-pole	M12, 8-pole	Super Seal, 3-pole	Deutsch DT04, 3-pole
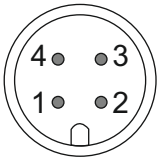	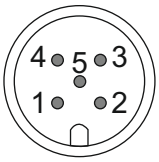	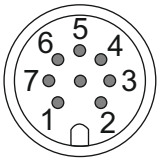	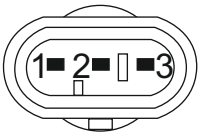	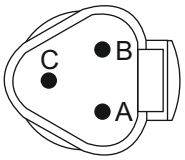

Deutsch DT04, 4-pole	Bayonet DIN, 4-pole	Valve (L-plug), 4-pole	MIL, 6-pole	Cable, 4-, 6-pole
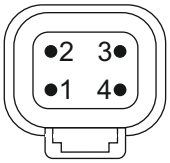	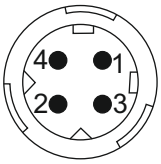	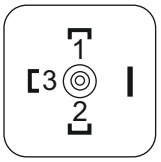	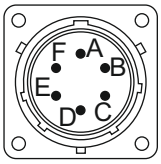	LIYCY 4 or 6x0,25 mm² grey

4.7 Example for connection

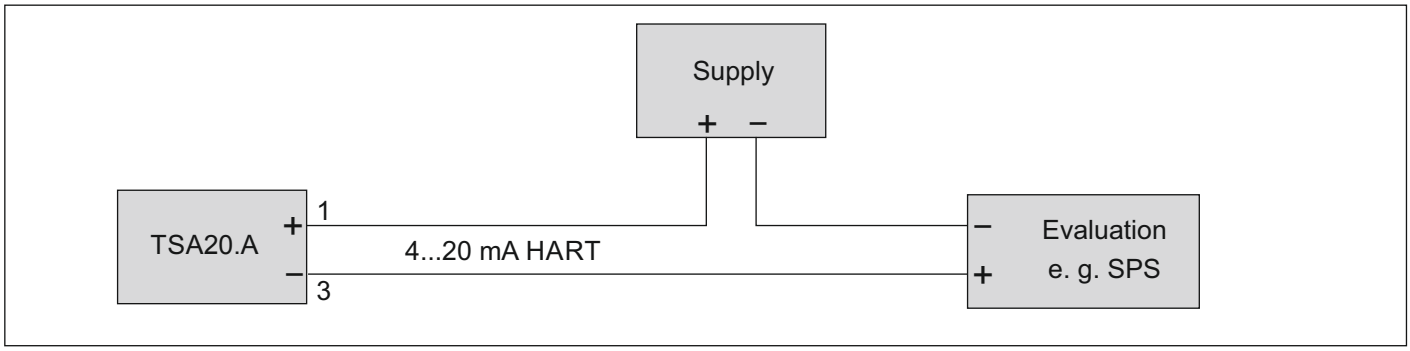

4.8 Connecting the switching outputs

The switching outputs are potential-free. They are electrically isolated from the current loop (see right).

In case of using only one switching point it is possible to connect the load on both sides of the contact, e.g. NPN-style: load connected to high or low side (see below).

Use an appropriate recovery diode if you want to switch inductive loads.

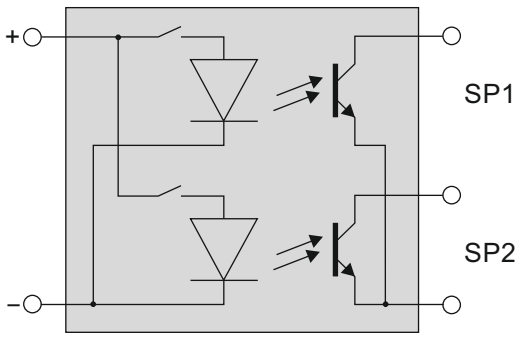

Isolated switching outputs

Switching outputs with common on low side (NPN)		
Two outputs are used	One output is used, load on high side	One output is used, load on low side
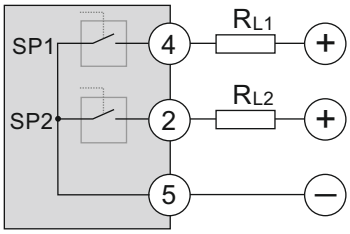	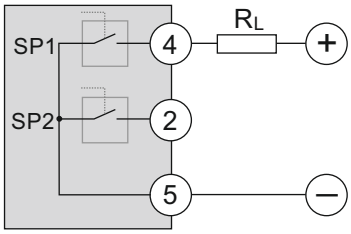	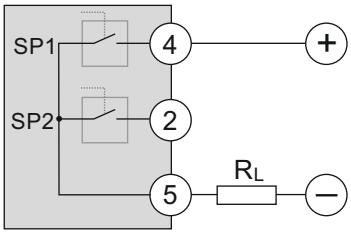

Switching outputs with common on high side (PNP)		
Two outputs are used	One output is used, load on high side	One output is used, load on low side
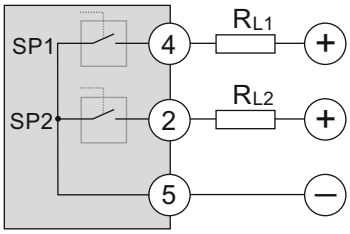	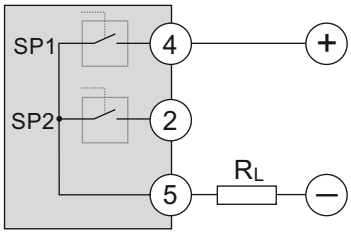	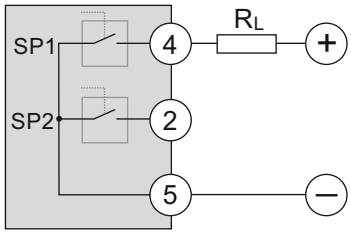

4.9 Functional test

The output signal must be proportional to the temperature. If not, this might point to a damage of the sensor. In that case refer to chapter "Troubleshooting" (page 21).

Warning

- Open pressure connections only after the system is without pressure.
- Observe the ambient and working conditions outlined in chapter "Technical data" (page 22)
- When touching the transmitter, keep in mind that the surfaces of the instrument components might get hot during operation.

4.10 Error detection / Error current

The device detects wire break and short circuit (sensor element <> measuring amplifier) as well as temperatures outside of the measuring range and indicates this with an error current in the current loop circuit.

The current output is proportional to the temperature from 3,8 to 20,5 mA. If the measured temperature would result in a current below 3,8 mA the current output is set to 3,6 mA (also for a wire short circuit). If the current would exceed 20,5 mA, the current output is set to 21 mA (also for wire break).

If the device is equipped with switching outputs, these will be disabled if an error is detected for more than 10 seconds. This ensures that the switches are in a safe state, comparable to the of voltage supply.

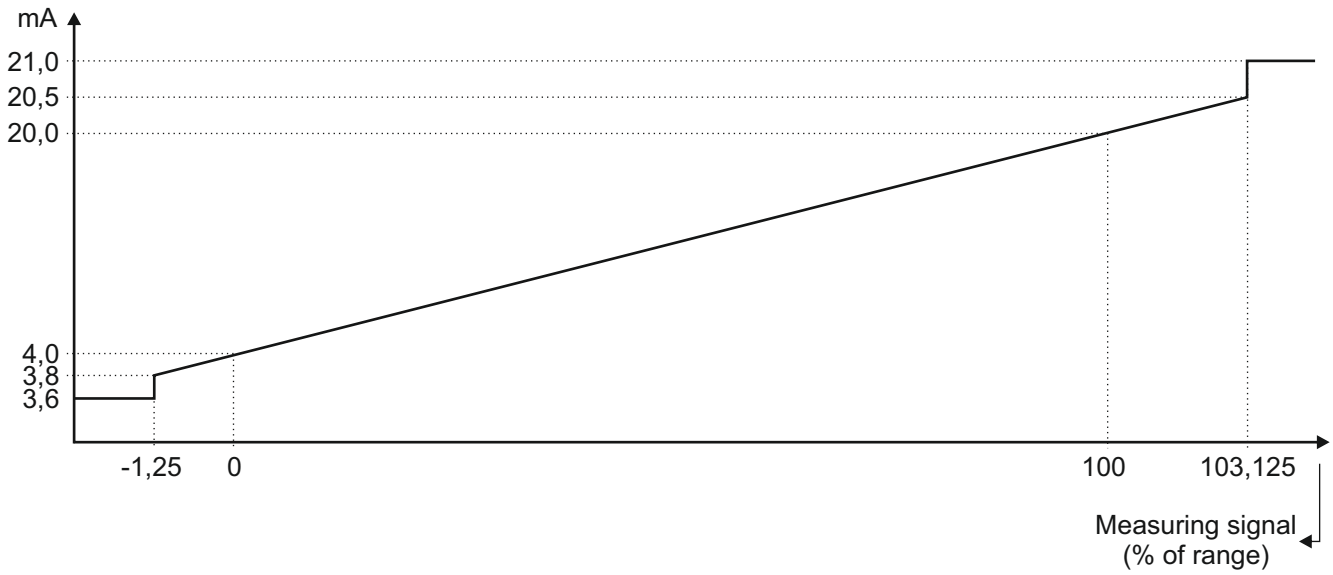

Output current and measured signal

4.11 Adjusting the display unit

It is possible to turn the display unit approx. 300° to optimize the reading. To do so, hold the plastic body with one hand and turn the display unit with the other hand into the wanted position.

The turning angle is limited by an internal limit stop. Do not try to force the display beyond that point. It might be destroyed.

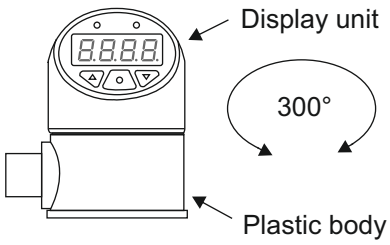

5 Handling and Configuration

Description of handling and configuration of the device with the three buttons on the head of display.

An overview of the menu tree is shown on page 23

The 3 buttons on the display head are working capacitive (no mechanical components), so there is no movement when pressing a button. The buttons are sensing the presence of a finger. Withdraw a finger at least 1 cm after pressing a button. This is useful for a proper detection of a keypress.

The following description is for the configuration with the three buttons. The configuration via HART communication modem is described in a separate manual.

5.1 System operating principles

5.1.1 System feedback to operator when buttons are pressed

The LEDs for switching output are used to give a feedback to operator when buttons are pressed. This does not affect the switching outputs themselves. When no button is pressed the LEDs are showing the state of switching outputs.

Button		Feedback
▼	Arrow button down (left)	Left LED is flashing
▲	Arrow button up (right)	Right LED is flashing
▲+▼	Both arrow buttons simultaneously	Both LEDs are flashing
●	Center button	Both LEDs are flashing rapidly

Feedback of the buttons

5.1.2 Display mode / Measured value indication

After power up the device starts in display mode. The current measured value is displayed or is displayed alternately with the unit (see 5.4.1).

The displayed value is flashing when the measured value is greater than the maximal presentable value. This can be caused by a fixed decimal point (see 5.4.3).

As long as the center button is pressed the selected unit will be displayed.

A single arrow button has no function in display mode.

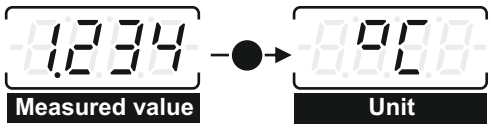

Indication of unit

5.1.3 Activating the configuration mode

When pressing both arrow keys simultaneously for at least 2 s the configuration mode is entered. The first entry of the operator menu appears on the display (bASE). If both buttons are not released within 4 s the device switches back to display mode, showing the current measured value again.

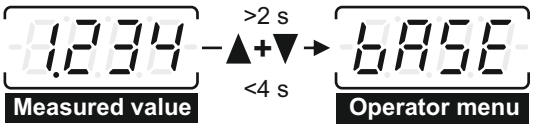

Activating the configuration mode

5.1.4 Configuration mode / Operator menu

The configuration mode always starts with the first item of the main menu (bASE). Within the menu you navigate with the arrow buttons. The center button selects a menu item respectively enters a submenu. Menu items which just show a value (e.g. maximum pointer) can be exit to the next upper menu item with the center button.

Every menu has the item „-ret-“ (return) which allows you to go back to the next upper menu. In the main menu it goes back to the display mode.

At the end of a menu (typically „-ret-“) you return to the first menu item when pressing the down arrow button again. Similarly, you jump to the end of the menu when pressing the up arrow in the first menu item.

In each menu item it is possible to return to the next upper menu by pressing both arrow buttons simultaneously. The feedback is a flashing „-ret-“. When doing this for more than 1 s, the device returns to display mode with the feedback of a flashing „-ESc-“ (escape).

If no button is pressed for 5 minutes in the configuration mode, the device automatically switches back to the display mode.

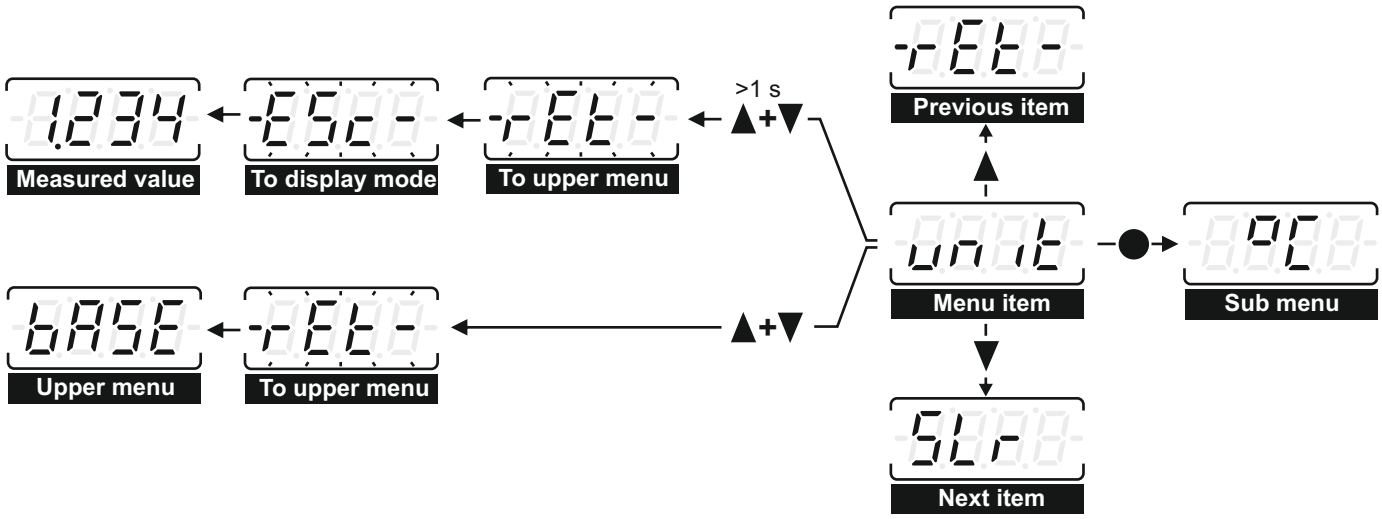

Configuration mode: Example operator menu

5.1.5 Setting values

There are 2 types of values that can be altered:

- values which can be selected from a predefined parameter list
- numerical values

Selecting a value from a list

Parameter lists are used for example for the units. Within the list you navigate with the arrow buttons. With the center button a selected value is stored, confirmed with indicating „Stor“. After that the device is in the next upper menu.

The list can be left by pressing both arrow buttons simultaneously to the next upper menu without changing the present value.

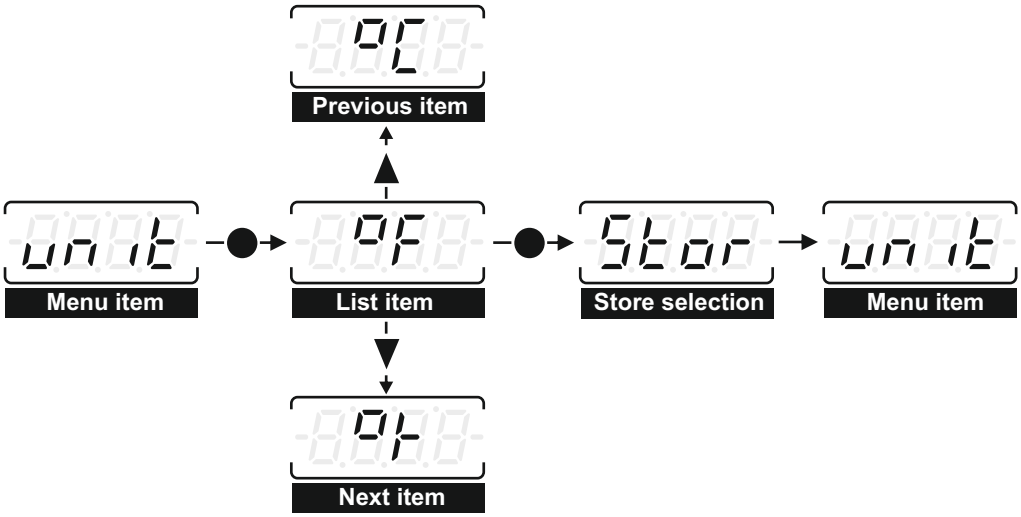

Configuration mode: Example to select a value from a list

Setting a numerical value

Numerical values are entered digit by digit. The selected digit flashes and is incremented with the up arrow button and decremented with the down arrow button. The more significant digit will also be incremented or decremented when stepping over zero. If a change of the active digit would exceed the allowable value (e.g. the lower or upper range limit) the allowable value will be shown. With the opposite arrow button you can return to the previous value.

The selected digit is confirmed with the center button and proceed to the next digit. You can cancel the value entry at any time by pressing both arrow buttons simultaneously. The device will then switch back to the corresponding menu entry. The partially edited value will not be saved.

When the right-most digit is selected, the center button confirms the whole value. "Stor" appears on the display to confirm that the value has been stored and the device switches back to the menu item for the value.

You can store a partially edited value at any digit position by holding the center button until "Stor" appears on the display (approx. 2 s).

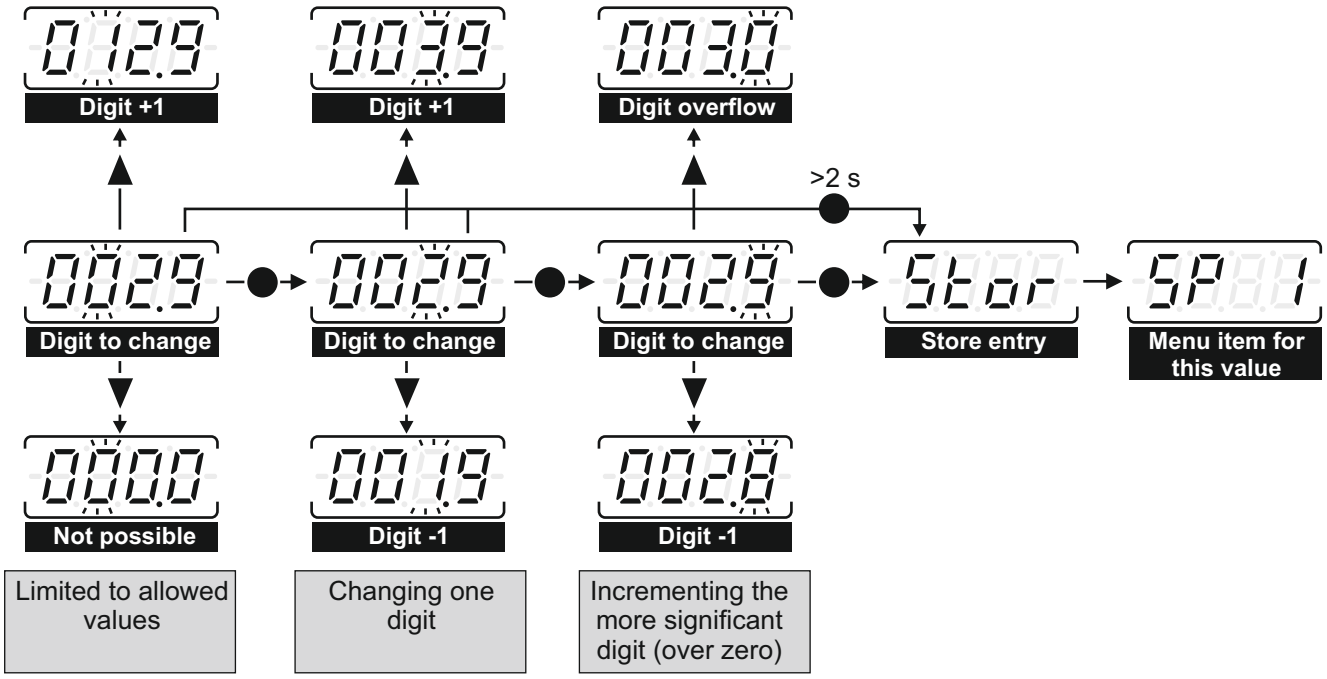

Button functions for entering numerical values (Example)

5.2 Main menu

The main menu has the following functions

Display	Designation	Description
bASE	Basic functions	Setting of unit, lower and upper range value, minimum and maximum pointer
diSP	Display functions	All settings relating to the display
SP	Switch point settings	Configuration of the switching outputs (option)
CAL	Calibration functions	Teaching lower and upper ranges, calibrating the current output
SYS	System data	Reset to factory settings, loop test, Displaying of: hardware version, software version, serial number
rEt-	Return	Return to display mode

5.3 Basic menu (bASE)

The basic menu has the following functions

Display	Designation	Description
unit	Measuring unit	Setting the measuring unit (parameter list)
SLr	Set lower range	Setting the temperature corresponding to 4 mA current signal
Sur	Set upper range	Setting the temperature corresponding to 20 mA current signal
dAP	Set damping	Setting the damping for the temperature signal
Lo	Trailing pointer minimum (low)	Display and/or delete the minimum trailing pointer
Hi	Trailing pointer maximum (high)	Display and/or delete the maximum trailing pointer
rEt-	Return	Return to main menu

5.3.1 Setting the measuring unit (unit)

A selected unit applies to data entries (e.g. switching points) and to the displaying of numerical values (e.g. the trailing pointers). Possible are the following units:

Display	Unit	Display	Unit
°C	°C	mA	mA
°F	°F	rEt-	Return to „Unit“
°K	°K		
%	% of measuring range		

Example for the needed steps for changing the unit from °F to °C:

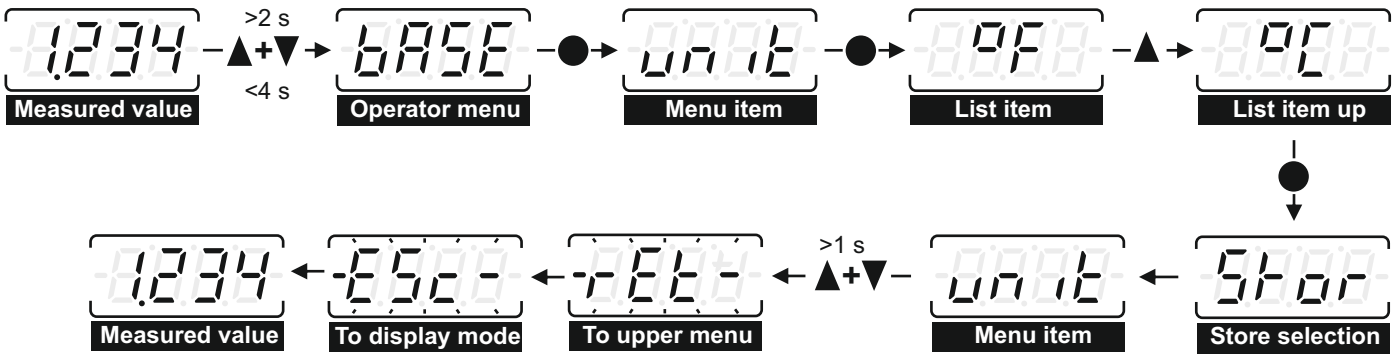

Steps to change the unit

5.3.2 Setting lower and upper ranges (SLr / Sur)

It is possible to set the lower range (SLr) and the upper range (Sur) value as needed within the allowed temperature range of the device (lower and upper range limit), which is also known as „turn down“. The minimum span is 50 °C. Make sure that there are no settings outside the permitted temperature range.

Select the desired menu item and then enter the temperature which has to correspond to 4 mA (SLr) or 20 mA (Sur) loop current. This will not affect the calibration of the transmitter.

A changing of the measuring range will delete the trailing pointers automatically.

This function is only available with the units °C, °F, °K.

Note: Although the switch points are set in the chosen unit, they are saved as a percentage of the range. Therefore the absolute switch point temperature will change with every new setting of the range. So it is always necessary to check the settings of the switch points after the setting of new range values.

5.3.4 Setting the damping (dAP)

The damping of the temperature can be set in intervals of 0.1 s. Damping is disabled with the setting 0.0 s. The default setting is 0.1 s.

The damping impacts current output and switch points equally.

5.3.4 Trailing pointers (Lo / Hi)

The trailing pointers for minimum and maximum values can be displayed or reset. A reset is confirmed with „----“ on the display.

The trailing pointer shows „Er.Lo“ respectively „Er.Hi“ if the current output has been set to an error current (see 4.10).

Display	Designation	Description
1234	Value of min/max pointer	Value of the min/max pointer in the selected measuring unit
clr	Clear	Reset the stored pointer value
-rEt-	Return	Return to „Lo“ or „Hi“

The steps to reset the minimum pointer are shown below.

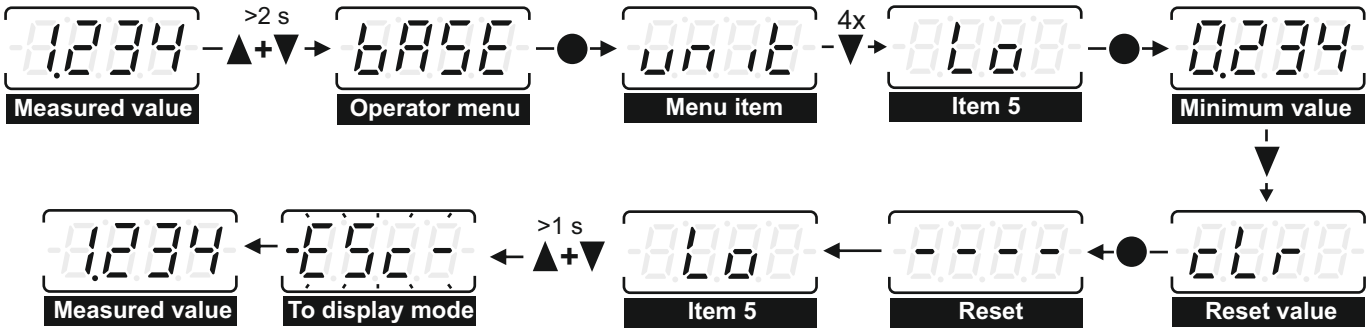

Steps to reset the minimum pointer

5.4 Display menu (diSP)

The display menu has the following functions

Display	Designation	Description
AddU	Add unit	Adds the unit to the temperature on the display or removes it
td	Display period for measured value (time data)	Setting between 0,5...99,9 s possible
tu	Display period for unit (time unit)	Setting between 0,0...99,9 s possible
rot	Rotate 180°	Rotate screen by 180° when the device is mounted upside down
dECP	Decimal places	Setting the decimal places (0...3 fixed decimal places or automatic
-rEt-	Return	Return to „diSP“

5.4.1 Display option for measuring unit (AddU)

You can set the display to show temperature and unit simultaneously. When „on“ is selected, the menu items „td“ (display period for temperature and „tu“ (display period for unit) are hidden (see 7.4.2).

Display	Designation	Description
oFF	Off	The unit will be displayed alternately with temperature
on	On	Unit and temperature will be displayed simultaneously
-rEt-	Return	Return to „AddU“

5.4.2 Display period for measured value/unit (td / tu)

The unit can be shown either by pressing the center button in display mode or alternately with the measured value. The display periods of measured value and unit can be configured independently of one another.

Setting the period for the unit to 0.0, only the measured value will be displayed.

5.4.3 Rotating the display by 180° (rot)

In case of mounting the device upside down, the 7-segment display and buttons can be rotated by 180° so that reading and operating are possible as is usual.

Display	Designation	Description
0°	Standard (0°)	
180°	Upside down (180°	Display rotated by 180° for upside down operation
-rEt-	Return	Return to „rot“

5.4.4 Decimal point setting (dEcP)

Possible is a fixed or an automatic positioning of the decimal point.

Display	Designation	Description
Auto	Automatic	The decimal point is set so that all digits are fully used
0000	No decimal place	
000.0	One decimal place	
00.00	Two decimal places	
0.000	Three decimal places	
-rEt-	Return	Return to „dEcP“

Please note that when the decimal point is fixed the measured value may not be displayed if there are insufficient digits left of the decimal point. In this case the maximum number that can be shown on the display will appear flashing, e.g. "99.99", when two decimal places are set for a measured value of 110 °C.

If the "Add unit" function is enabled (see 5.4.1), the parameter list will be modified to reflect the available options for displaying measured value and unit simultaneously.

5.5 Switch point menu (SP)

The menu has items for the settings of the two switch points. The output behaviour can be a hysteresis or a frame function where the menu items are different. The switching delays can be defined independently from the output function.

Display	Designation	Description
SP 1	Switch point	Switch point in the selected measuring unit
rP 1	Reset point	Reset point in the selected unit
dS 1	Delay switch	Output delay at switch point
dr 1	Delay reset	Output delay at reset point
out 1	Output function	Configuring the output behaviour (normally open, normally close, hysteresis / frame function)
LEd 1	LED switch point	Configuring the behaviour of the LED for switch point (electrically, logically)
Menu items for switch point 2		
-rEt-	Return	Return to „SP“

The switch point (SP) must be between the upper range value (URV) and the reset point. The reset point (rP) must be between the lower range value (LRV) and the switch point. The minimum hysteresis (difference between switch point and reset point) is 0,5% of the measuring range (MR) which is configured under 5.3.2.

It is possible to define a delay for the switch point as well as the reset point, e.g. to avoid that short temperature peaks trigger the switch.

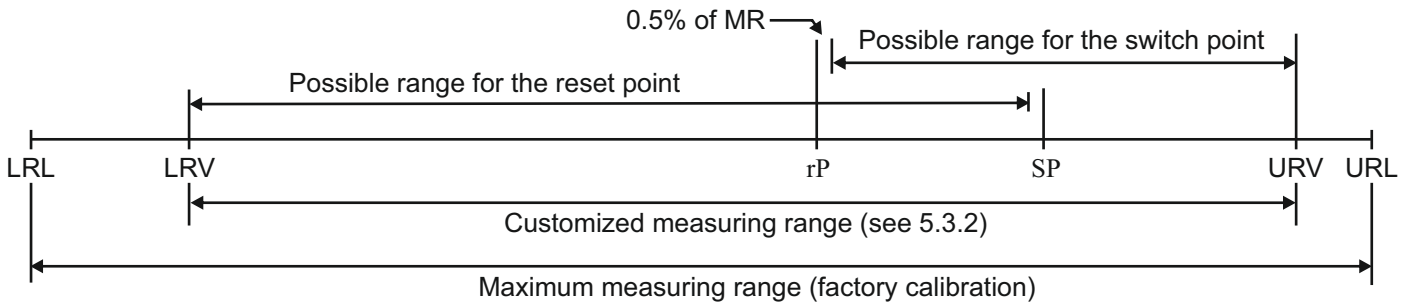

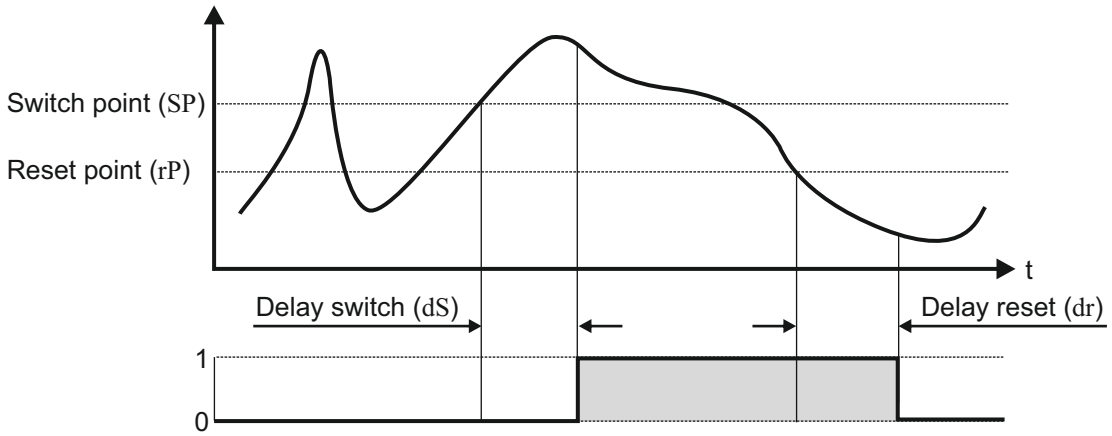

When the frame function is used, the menu items for switch point and reset point are replaced by the upper and lower frame limits. The minimum difference of the frame limits is 0,5% of the measuring range (MR) which is configured under 5.3.2.

Display	Designation	Description
FH 1	Frame high	Upper frame limit in the selected measuring unit
FL 1	Frame low	Lower frame limit in the selected measuring unit
dS 1	Delay switch	Output delay when entering the frame
dr 1	Delay reset	Output delay when leaving the frame
out 1	Output function	Configuring the output behaviour (normally open, normally close, hysteresis / frame function)
LEd 1	LED switch point	Configuring the behaviour of the LED for switch point (electrically, logically)
Menu items for switch point 2		
-Et-	Return	Return to „SP“

5.5.1 Configuring the output function (out 1 / 2)

Possible are hysteresis or frame functions and the output as normally open or closed contacts .

Display	Designation	Description
Hno	Hysteresis, normally open	If the temperature is above the switch point the switch is closed. At the lower range limit the switch is open.
Hnc	Hysteresis, normally closed	If the temperature is above the switch point the switch is open. At the lower range limit the switch is closed.
Fno	Frame, normally open	Inside of the frame the switch is closed. At the lower range limit the switch is open.
Fnc	Frame, normally closed	Inside of the frame the switch is open. At the lower range limit the switch is closed.
-rEt-	Return	Return to „out 1" or „out 2"

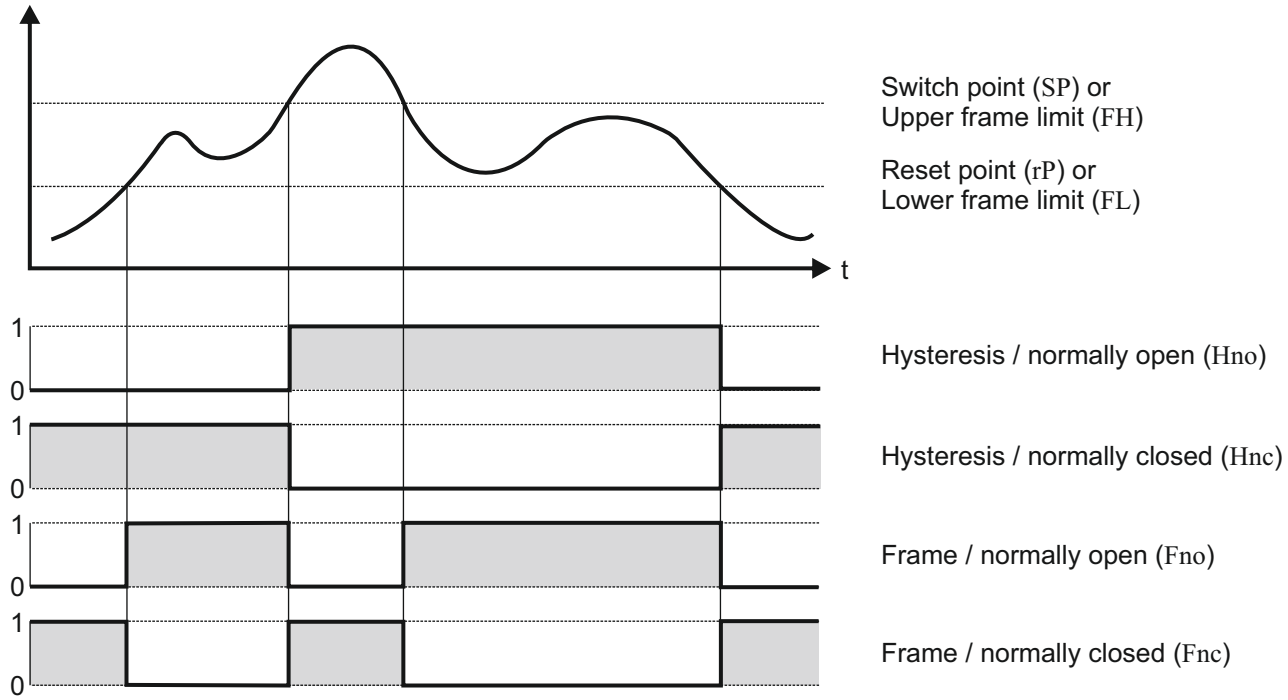

5.5.2 Configuring the behaviour of the LED switch point (LEd 1 / 2)

Possible is electrical or logical behaviour.

Display	Designation	Description
ELEc	Electrical behaviour	The LED is „ON“ when the switch point contact is closed
LoGi	Logical behaviour	The LED is „ON“ when the switch point value is reached or within frame
-rEt-	Return	Return to „LEd 1" or „LEd 2"

5.6 Calibration menu (CAL)

The calibration menu has the following functions

Display	Designation	Description
tLr	Teach lower range	Adjust the lower range (4 mA) to the applied temperature
tur	Teach upper range	Adjust the upper range (20 mA) to the applied temperature
4mA	Adjust 4 mA	Adjust the current output at 4 mA
20mA	Adjust 20 mA	Adjust the current output at 20 mA
rEt	Return	Return to „CAL“

5.6.1 Adjusting lower and upper range (tLr / tur)

It is possible to adjust the output current for the lower range value (LRV) and the upper range value (URV) under the menu items „tLr“ and „tur“ to a certain pressure.

For the adjustment a stable temperature according the settings in chapter 5.3.2 has to be applied, e.g. by using a thermostatic bath. Then enter the calibration menu and select „tLr“ respectively „ tur“. When entering the menu the entry points to „rEt“. To confirm the applied temperature go to „YES“ with one of the arrow buttons and press the center button. After this final confirmation the applied temperature will be matched to the lower or upper range value.

Example: In chapter 5.3.2 the lower range value was set to 30 °C . Now apply 30 °C with a thermostatic bath. When the display reading is stable go to the menu item „Teach Lower Range“ and confirm with „YES“. From now on the transmitter will regard the actual sensor element reading as 30 °C. The internal calculation of the temperature value out of the measured value will be adapted accordingly.

When confirming with the center button „donE“ appears on the display which confirms that the device has acknowledged the change. Then the device switches back to the initial menu item („tLr“ or „tur“).

Display	Designation	Description
rEt	Return	Return to „tLr“ or „tur“
YES	Yes	Adjust the lower or upper range value to the applied pressure

5.6.2 Adjusting the current output (4 mA / 20 mA)

It is possible to adjust the output current to eliminate tolerances and systemic deviations in the output driver or subsequent devices in the current loop.

Below are the steps for the lower current limit (4 mA). The adjusting of the upper current limit (20 mA) is done similar.

Select the menu item „4 mA“ and the device sets the output current to 4 mA. The display shows „04.00". Now check the reading on the remote measuring instrument. If it deviates from 4 mA, enter this value in the device.

Example: The remote instrument shows 4.02 mA due to tolerances in the current loop. Enter then „04.02" at the device.

If the value is confirmed the device will adjust the current output so that the remote instrument now will show 4.00 mA. The device will hold the 4 mA current output for 3 seconds so that it‘s possible to check the reading of the remote instrument. During this time the display will show „Stor“. After that period the device will calculate the current output depending on the measured temperature and switch back to the menu item „4 mA“.

5.7 System menu (SYS)

The system menu has the following functions

Display	Designation	Description
LooP	Loop test	Setting a fixed current in order to test the current loop
inFo	Information	Indicating of hardware and software version, serial number
rES	Reset	Reset to factory settings
rEt-	Return	Return to „SYS“

5.7.1 Loop test (LooP)

The device can be used to test the current loop. For this the current output can be set to any value between 3.6...21 mA. When an entry is confirmed, the transmitter sets the output current to the selected value and displays this value flashing. The flashing shows that the displayed value is not a valid measurement.

Note: In this mode the device will not return to the display mode after 5 minutes but continue the test until the operator will stop it by pressing the center button or both arrow buttons.The device returns to the menu item „LooP“ and the output current returns to the value which is corresponding to the measured pressure.

5.7.2 Information (inFo)

The information menu has the following functions

Display	Designation	Display	Designation
HW1	Hardware version 1 (HW1)	SW2	Software version 2 (SW2)
HW2	Hardware version 2 (HW2)	Sn1	Serial number 1 (Sn 1)
SW1	Software version 1 (SW1)	Sn2	Serial number 2 (Sn 2)
rEt-	Return	Return to „InFo“	

Due to the limited number of alphanumerical segments on the display the values for these items are split.

5.7.3 Reset to factory settings (rES)

It is possible to reset the device to the configuration as delivered with the menu item „Reset“ (rES). When entering the menu the entry points to „rEt“. To confirm the reset go to „YES“ with one of the arrow buttons and press the center button. After this final confirmation all parameters will be changed to the settings as delivered.

When confirming with the center button „donE“ appears on the display which confirms that the device has been reset to factory settings. Then the device switches back to the initial menu item („rES“).

Display	Designation	Description
rEt-	Return	Return to „rES“
YES	Yes	Resetting the device to factory settings

5.8 Overview of the menu tree

bASE		Menu with basic functions
	unit	Setting the measuring unit (°C, °F, °K, %, mA)
	SLr	Setting the temperature (LRV) that corresponds to 4 mA output signal (only for °C, °F, °K)
	Sur	Setting the temperature (URV) that corresponds to 20 mA output signal (only for °C, °F, °K)
	dAP	Setting the damping for the temperature signal
	Lo	Display and/or delete the minimum trailing pointer
	Hi	Display and/or delete the maximum trailing pointer
diSP		All settings relating to the display
	AddU	Enable or disable displaying unit and temperature simultaneously
	td	Setting the display period for the measured value (only when „AddU“ is disabled
	tu	Setting the display period for the unit (only when „AddU“ is disabled
	rot	Display direction (0° = standard, 180° = turned)
	dECP	Display the decimal places (0...3 fixed decimal places or automatically)
SP		Configuring the switching outputs (when available)
	SP 1 / FH 1	Switch point or upper frame limit of switching output 1
	rP 1 / FL 1	Reset point or lower frame limit of switching output 1
	dS 1	Output delay at the switch point of switching output 1
	dr 1	Output delay at the reset point of switching output 1
	out 1	Output functions of switching output 1 (Hno, Hnc, Fno, Fnc)
	LEd 1	Behaviour LED switch point
	Menu items for switch point 2	
CAL		Calibration menu
	tLr	Adjusting lower range value (4 mA) to the applied temperature
	tur	Adjusting upper range value (20 mA) to the applied temperature
	4mA	Adjusting the current output at 4 mA
	20mA	Adjusting the current output at 20 mA
SYS		System functions
	LooP	Setting a fixed current for test of the loop
	inFo	Versions of hardware and software, serial number
	rES	Reset to factory settings

6 Troubleshooting

Warning

- Open pressure connections only after the system is without pressure.
- Residual media in dismounted instruments can result in a risk to personnel, the environment and equipment
- Remove the temperature sensor from service and mark it to prevent it from being used again accidentally, if it becomes damaged or unsafe for operation.

Failure	Possible cause	Procedure
No output signal	Cable break Mechanical load too high or overtemperature	Check connectors and cable Replace the sensor with a suitable design
No/false output signal	Incorrectly wired	Follow pin assignment (see instrument label / operating instructions)
Erroneous measured values	Sensor drift caused by overtemperature Sensor drift caused by chemical attack	Replace the sensor with a suitable design Replace the sensor with a suitable design
Erroneous measured values (too low)	Entry of moisture into cable or plug	Replace the sensor with a suitable design
Erroneous measured values and response time too long	Wrong mounting geometry, e.g. mounting depth too or heat dissipation too high Deposits on the sensor	The temperature-sensitive area of the sensor must be inside the medium surfaces must be isolated Remove deposits
Measurement signal „comes and goes“	Cable break in connecting cable or loose contact caused by mechanical overload	Replace the sensor with a suitable design, e.g. thicker conductor cross section
Corrosion	Composition of medium not as expected or modified or wrong material of protecting tube	Analyse medium and then select a more suitable material
Signal interference	Stray currents caused by electric fields or earth loops Earth circuits	Use of screened connecting cables, increase the distance to motors and power lines Elimination of potentials, use of supply isolators or galvanically isolated measuring amplifiers

Note: In case of unjustified reclamation an additional charge is possible.

7 Maintenance, Dismounting, Return, Cleaning, Disposal

7.1 Maintenance

The screw-in temperature sensors TSA20.A require no maintenance and contain no components which could be repaired or replaced.

7.2 Dismounting

Warning

Residual media in dismounted instruments can result in a risk of personnel, the environment and equipment. Take sufficient precautionary measures.

Warning

There is a risk of burns. Let the instrument cool down sufficiently before dismounting. During dismounting there is a risk of dangerously hot pressure media escaping.
Only disconnect the resistance thermometer once the system has been depressurised.

7.3 Return

Warning

Before the return of an instrument see chapter 7.4.

When returning the instrument, use the original packaging or a suitable package.

To avoid a damage, use for example antistatic plastic film, shock-absorbent material, a marking as highly sensitive measuring instrument.

7.4 Cleaning

!

- Before cleaning the instrument disconnect the electrical connection.
- Clean the instrument with a moist cloth.
- Electrical connections must not come into contact with moisture.
- Wash or clean the dismounted instrument before returning it in order to protect personnel and the environment from exposure to residual media.
- Residual media in dismounted instruments can result in a risk to persons, the environment and equipment. Take sufficient precautionary measures.

7.5 Disposal

i

Dispose instrument components and packaging materials in accordance with the respective waste treatment and disposal regulations of the region or country to which the sensor is supplied

8 Technical data

Input		
Sensor RTD Pt100:	-50...200 °C (minimum range: 50°C) (Option for higher measurement ranges up to -50...+250 °C available on request)	
Output		
Current signal:	4...20 mA with superimposed communication signal (HART), 2-wire current loop	
Current range:	3,8...20,5 mA	
Signal on error:	3,6 mA (sensor short circuit, underflow) 21 mA (sensor break, sensor open circuit, overflow)	
Performance		
Sensor:	RTD Pt100:	Class A / Class B / Class AA (B1/3 DIN)
Measuring amplifier:	Accuracy:	0,3% of range
	Resolution:	16 Bit
	Filter setting:	0...99 s
	Measuring rate:	10 measurements/s
	Configuration:	Keys on display / via software (HART communication)
	Transmission behaviour:	temperature linear
	Turn-on delay time:	<5 s
	Reponse time:	20 ms
Indicator / limit values:	Resolution:	-9999...9999 digit
	Error of measurement:	±0,2% of range, ±1 digit
	Temperature drift:	100 ppm/K
	Features / operation:	according VDMA 24574-1 up to 24574-4
Programmable features		
Measuring amplifier:	Measuring range start (LRV) / Measuring range end (URV) / Adjustment, simulation of output current / Filter function Linear output signal / HART address / 2-point calibration	
Display:	range of indication / time of indication / decimal point / units / stabilisation of zero point / locking of programming / calibration points / TAG number	
Limit value contacts:	limit value 1 and 2 / hysteresis 1 and 2 / delay times 1 and 2	
Indication		
Display:	7 segment, 8,5 mm, red, 4 digits, representation mirror-inverted 180° possible	
Head of display:	rotatable approx. 330°	
Memory:	minimum / maximum values	
Indication:	- measuring value - unit of measurement - control menu	
Decimal point:	automatically or manually, dependent on measuring range / unit Representation: xxxx / xxx.x / xx.xx / x.xxx	
Limit contacts		
Electronically:	2x PNP or NPN (30 VDC, 200 mA) Option: 2x PNP or NPN (30 VDC, 1000 mA)	
Indication:	1 LED red for each limit value	
Voltage across:	<1 V	
Settings:	with 3 keys (TouchM-Technology)	
Setting range:	switch point and hysteresis: any value within measuring range	
Switching delay:	0,0...999,9 s	
Failsafe function:	adjustable	
Galvanical insulation:	switching outputs are separated from measuring amplifier	
Supply		
Voltage:	HART current loop: 12...40 VDC	
Load:	R = (U_B-12 V) / 21 mA	
Reverse battery:	Protection available (no function, no damage)	

8 Technical data (continued)

Ambient conditions			
Temperature:	Operating range:	-20...+80 °C	**! Attention: Temperatures above +85 °C can destroy the electronics.**
	Medium:	-50...+200 °C	
	Storing:	-40...+100 °C	
Condensation:	uncritical		
Mechanics			
Dimensions:	see page 3		
Process connection:	1/4” /3/8” / 1/2” / 3/4” / 1” / 1/4NPT / 3/8NPT / 1/2NPT		
Extension:	100 mm (option)		
Electrical connection:	see page 3		
Material:	Protecting tube:	stainless steel 1.4571 (standard 6x0,5 mm)	
	Extension:	stainless steel 1.4571	
	Process connection:	stainless steel 1.4571	
	Body:	PBT GF30	
	Head of display:	polycarbonate (makrolon)	
Weight:	approx.150 g (70 mm, 1/2”, M12)		
Fitting position:	any		
System pressure:	PN 25		
Protection of device:	Ingress protection:	at least IP 65 (electronics)	
	PCB:	potted	

9 Dimensions (in mm)

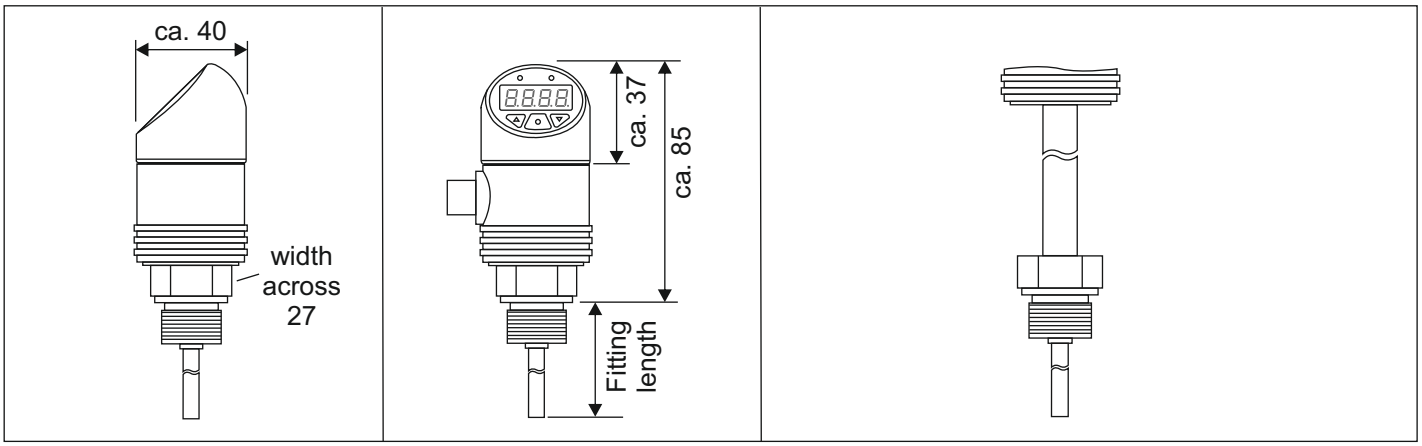

TSA20

Electronic Temperature Sensor with LED-display (optional)

- **Pt100 resistance thermometer measuring range: -50...+250 °C**
- **analogue output 4...20 mA (current loop, HART®)**
- **optional with display and additional switching points**
- **accuracy class A, B, AA (B 1/3 DIN)**
- **universe useable as temperature switch, temperature sensor and/or temperature indication**
- **material of wetted parts: stainless steel 1.4571**
- **easy programming of switching points and analogue output with keys**
- **display 330° rotatable and 180° mirror-inverted**

Description:
The electronic temperature sensor of the series TSA20 measures the medium temperature with a Pt100 resistance thermometer. The analogue output continuously indicates the current temperature; the optional switching outputs are used for electronic limit control.
In the version with display, the temperature is displayed and the setting can be made directly on the device. The programming of the device without display is done by the factory or via HART® communication.
At higher temperatures, a neck pipe protects the electronics from overheating. Due to the large measuring range from -50 to + 250 °C, the different process connections and installation lengths, a very flexible application is possible in almost all industrial processes.

Typical applications:
Due to its versatility, the temperature sensor TSA20 is very universally applicable. It is mainly used in cooling and heating circuits, plants, compressors and motors.

PKP Prozessmesstechnik GmbH
Borsigstr. 24 • D-65205 Wiesbaden
+49 (0) 6122-7055-0 • +49 (0) 6122 7055-50
info@pkp.de • www.pkp.de

Materials:

Housing:	PBT GF30, Display-Top: Polycarbonate
Wetted parts:	stainless steel, 1.4571
neck tube (optional):	stainless steel, 1.4571

Technical data:

Process connection:	different, see ordering code
Media temperature:	-50...+250 °C
Ambient temp.:	-20...+80 °C
Storage temp.:	-40...+100 °C
Accuracy:	
Sensor:	Accuracy class A, B, AA (B1/3 DIN)
Transmitter:	+/- 0,3% of measured range
Indication:	+/- 0,2 % of measured range, +/-1 Digit
Resolution:	16 Bit
Measuring rate:	10 measurements/s
Filter settings:	0...99 s
Adjustments:	Per Software (HART® Communication) or via display (optional)
Transmission behaviour:	temperature linear
Mounting position:	any
Pressure:	PN 25
Weight:	ca. 140 g (150 g with display)
Protection class:	IP65 (electronic)

Electrical Data:

Sensor:	Pt100, class A, B, AA (B 1/3 DIN)
Power supply:	12…40 VDC
electr. connection:	different, see ordering code
Analogue output:	4...20 mA current loop, HART® (2-wire)
Current range:	3,8...20,5 mA
Signal on error:	3,6 mA (sensor short circuit, underflow) 21 mA (sensor break, sensor open circuit, overflow)
Load:	$R=(U_B-12\ V)\ /\ 22\ mA$

Display (optional):

Display:	7-segment-LED , red, 8,5 mm, representation mirror-inverted 180°
Head of display:	rotatable approx. 330°
Memory:	minimum / maximum values
Indication:	measuring value / unit of measurement / control menu
Decimal point:	automatically or manually, dependent on measuring range / unit
Resolution:	-9999...9999 digit
Error of measurement:	+/- 0,2 % of range, +/- 1 digit
Temperature drift:	100 ppm/K

Limit contacts (optional):

Electronically:	1 or 2 NPN or PNP
Max. switching capacity:	200 mA (optional 1000 mA), 30 VDC
Indication:	1 LED red for each limit value LED lights up: transistor conductive LED dark: transistor locked
Voltage across:	<1 V
Settings:	with 3 keys (TouchM-Technology)
Setting range:	switch point and hysteresis: any value within measuring range
Switching delay:	0,0...999,9 s
Failsafe-function:	adjustable
Galvanical insulation:	switching outputs are separated from measuring amplifier

Programmable Features (via keys):

Measuring amplifier:	measuring range start (LRV) measuring range end (URV) adjustment, simulation of output current, filter function linear output signal HART®-address 2-point calibration
Display (optional):	range of indication time of indication decimal point units stabilisation of zero point locking of programming calibration points TAG number
Limit value contacts: (optional)	limit value 1 and 2 limit value 1 and 2 delay times 1 and 2

PKP Prozessmesstechnik GmbH
Borsigstr. 24 • D-65205 Wiesbaden
+49 (0) 6122-7055-0 • +49 (0) 6122 7055-50
info@pkp.de • www.pkp.de

Connection Example:

Assignment plug M12 x 1, 8 pole:

Current loop 4… 20 mA, HART®:

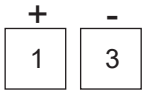

Electronical limit value contacts (optional):

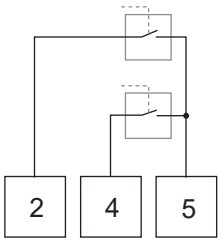

Shield:

HART®-Communication:

The HART-Tool is a graphical user interface with menu-driven program for configuration. It can be used for putting into operation, configuration, analysis of signals, data backup and documentation of the device.

Operating systems:	Windows2000, Windows XP, Windows 7, Windows 8.1
Connection:	HART® Interface PC-USB interface hand-held HART®-Communicator
Settings:	Adjustment of output current Limits of measuring range 2-point calibration Simulation of output current Linear output signal Filter function HART® address with option switching contacts: limit value 1 and 2 hysteresis value 1 and 2 delay times 1 and 2

Please note:
When using communication via a HART modem, a communication resistance of 250 Ω has to be taken into account.

Ordering code:

Ordering code: TSA20. S. 1. 6S. A. 1. 4. W. 0. 0.

Electronic temperature sensor

Version:
S = without display (no limit contact)
A = with indication and keys

Model of sensor:
1 = Class A (Standard)
2 = Class B
3 = Class AA (B1/3 DIN)

Protective tube:
6S = Ø 6 mm
1X = others (please specify)
6H = Ø 6 mm with neck tube
1H = others with neck tube (please specify)

Installation length:
A = 50 mm
B = 100 mm
C = 200 mm
D = 250 mm
E = 400 mm
F = 600 mm
G = 1000 mm
S = other length (please specify)

Process connection:
1 = G 1/4 male thread
2 = G 3/8 male thread
3 = G 1/2 male thread
4 = G 3/4 male thread
5 = G 1 male thread
6 = 1/4“ NPT
7 = 3/8“ NPT
8 = 1/2“ NPT

Electrical connection:
4 = M12x1, 4-pole (max. 1 limit switch)
5 = M12x1, 5-pole (for 2 limit switches)
8 = M12x1, 8-pole
1 = Valve connection, 4-pole (max. 1 limit switch)

Output signal:
(limit switches only at version A):
0 = 4...20 mA, without limit switches
1 = 4...20 mA and 1 x PNP, 30 VDC, 200 mA
2 = 4...20 mA and 2 x PNP, 30 VDC, 200 mA (standard)
3 = 4...20 mA and 1 x NPN, 30 VDC, 200 mA
4 = 4...20 mA and 2 x NPN, 30 VDC, 200 mA
5 = 4...20 mA and 1 x PNP, 30 VDC, 1000 mA
6 = 4...20 mA and 2 x PNP, 30 VDC, 1000 mA
7 = 4...20 mA and 1 x NPN, 30 VDC, 1000 mA
8 = 4...20 mA and 2 x NPN, 30 VDC, 1000 mA

Configuration output signal:
W = 0...200 °C (factory setting)
K = customised, minimum range 50 K (please specify)

Options:
0 = without
1 = please specify in writing

Accessories:

PVC-cable **SM12** with M12 plug, 4-or 5 pole
HART®-tool: modem with HART®-cable, USB-cable, software

PKP Prozessmesstechnik GmbH
Borsigstr. 24 • D-65205 Wiesbaden
+49 (0) 6122-7055-0 • +49 (0) 6122 7055-50
info@pkp.de • www.pkp.de

Dimensions:

TSA20-S, without Display:

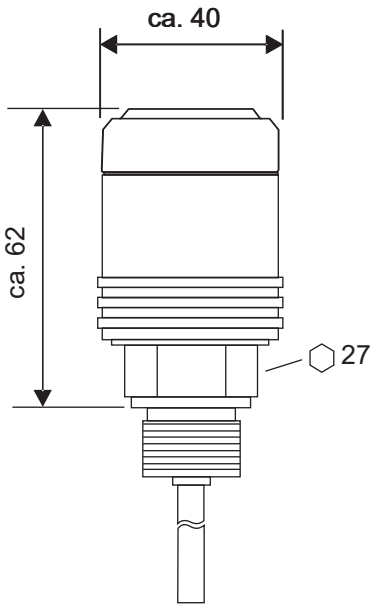

TSA20-A, with Display:

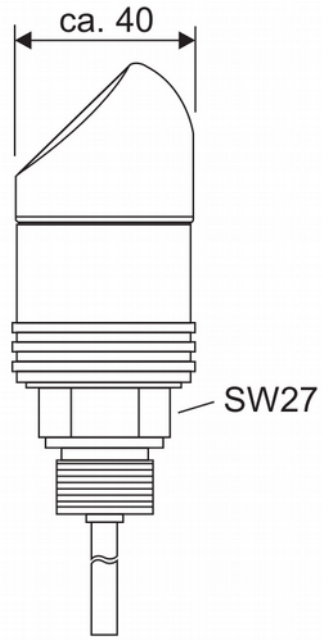

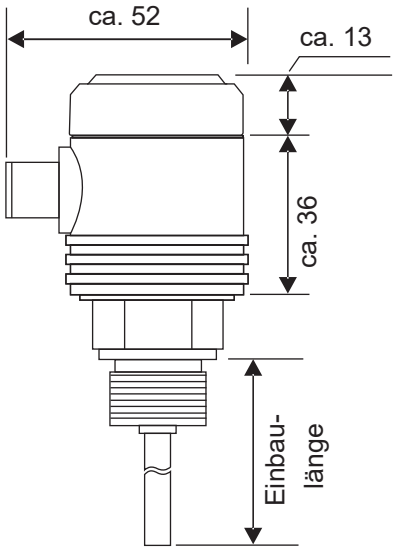

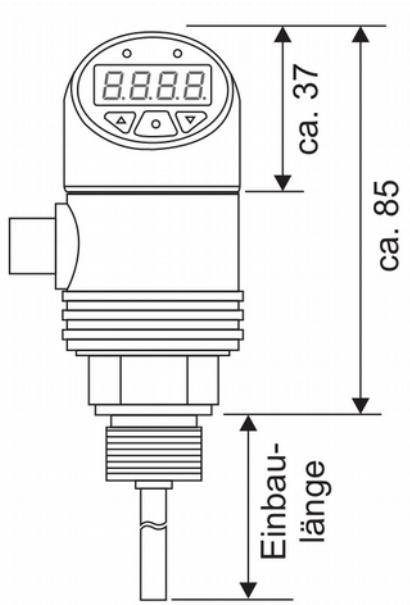

PKP Prozessmesstechnik GmbH
Borsigstr. 24 • D-65205 Wiesbaden
+49 (0) 6122-7055-0 • +49 (0) 6122 7055-50
info@pkp.de • www.pkp.de