Instruction Manual

SKG01 / SKG02

Ball Valve with threaded or flanged connection

PKP Prozessmesstechnik GmbH
Borsigstraße 24
D-65205 Wiesbaden-Nordenstadt
Tel.: ++49-(0)6122-7055-0
Fax: ++49-(0)6122-7055-50
Email: info@pkp.de

Table of Contents

Safety Information

General Instructions

To ensure safe operation, the device should only be operated according to the specifications in the instruction manual. The requisite Health & Safety regulations for a given application must also be observed. This statement also applies to the use of accessories.
Every person who is commissioned with the initiation or operation of this device must have read and understood the operating instructions and in particular the safety instructions!

The liability of the manufacturer expires in the event of damage due to improper use, non-observance of this operating manual, use of insufficiently qualified personnel and unauthorized modification of the device.

Proper Usage

Ball valves of series SKG01 and SKG02 are suitable for shutting off the flow of liquids and gases. It should only be used clean liquids and gases, on which the material of the ball valve will be resistant. Pollution or using outside the nominal pressure range and/or the nominal temperature range should causes damages on the armature especially on the seals.
All other usage is regarded as being improper and outside the scope of the device.

Dangerous substances

For dangerous media such as e.g. Oxygen, Acetylene, flammable or toxic substances as well as refrigeration systems, compressors, etc. must comply with the relevant regulations beyond the general rules.

Qualified Personnel

The SKG01 and SKG02 devices may only be installed by trained, qualified personnel who are able to mount the devices correctly. Qualified personnel are persons, who are familiar with assembling, installation, placing in service and operating these devices and who are suitably trained and qualified.

Inward Monitoring

Please check directly after delivery the device for any transport damages and deficiencies. Additional with reference to the accompanying delivery note the number of parts must be checked. Claims for replacement or goods which relate to transport damage can only be considered valid if the delivery company is notified without delay.

Safety advices for adjustment / starting

- Secure that the machine / plant come up to the Machinery Directice after the mounting and installing of the armatures and valves.
- Switch off all the devices / machines / plant affected by mounting or repair. If appropriate, isolate the devices / machines / plant from the mains.
- Check (for example in chemical plants) whether the switching off of devices / machines / plant will cause potential danger.
- Before mounting or repairing, remove the pressure from pneumatic / hydraulic devices / machines / plant.
- Check the correct functioning of the safety equipment (for example the emergency push off buttons/ safety valves, etc)!
- The armatures/valves must be used within the values specified in the technical data!
- The operating of the armature/valve outside the nominal temperature range could destroy the sealings and the bearings.
- The operating of the armatures/valves outside the nominal pressure range could destroy the inner parts and the body.
- Never remove a cap or a other component part if the armature/valve will be under pressure.
- After the maintenance or repair check the right function of the armature/valve and the tightness of the pipe connections.

Mounting

- The mechanical installation will be same at all variants of the ball valve. There will be differences in the type of connection.
- Observe the flow direction: the handle should point at the flow direction.
- Remove the package and the safety devices (e.g. caps or plugs). Take care that there will be no parts of the package or other parts in the armature.
- Clean up the pipes in which the ball valve will be mounted. Pollution could affect the safety in operation and the duration of life of the armature. If necessary you have to install a Y-strainer in front of the ball valve.
- Avoid stress in case of non align pipes.

Mounting with threaded connection

- Before lay on sealing compounds, check the hardly screwing by the pipes into the valve body.
- Lay on the correct sealing compounds on the pipes end. By using PTFE-ribbon or hemp sealings observe the screw direction. Don`t use sealing compounds which are not prescribed for your employment.
- Screw the pipes into the connection ends of the valve. Don`t use the handle as a lever.
- Strike up the pipes with pressure after that time the manufacturer of the sealing compounds pretends to harden it.
- Check the tightness of all connections.

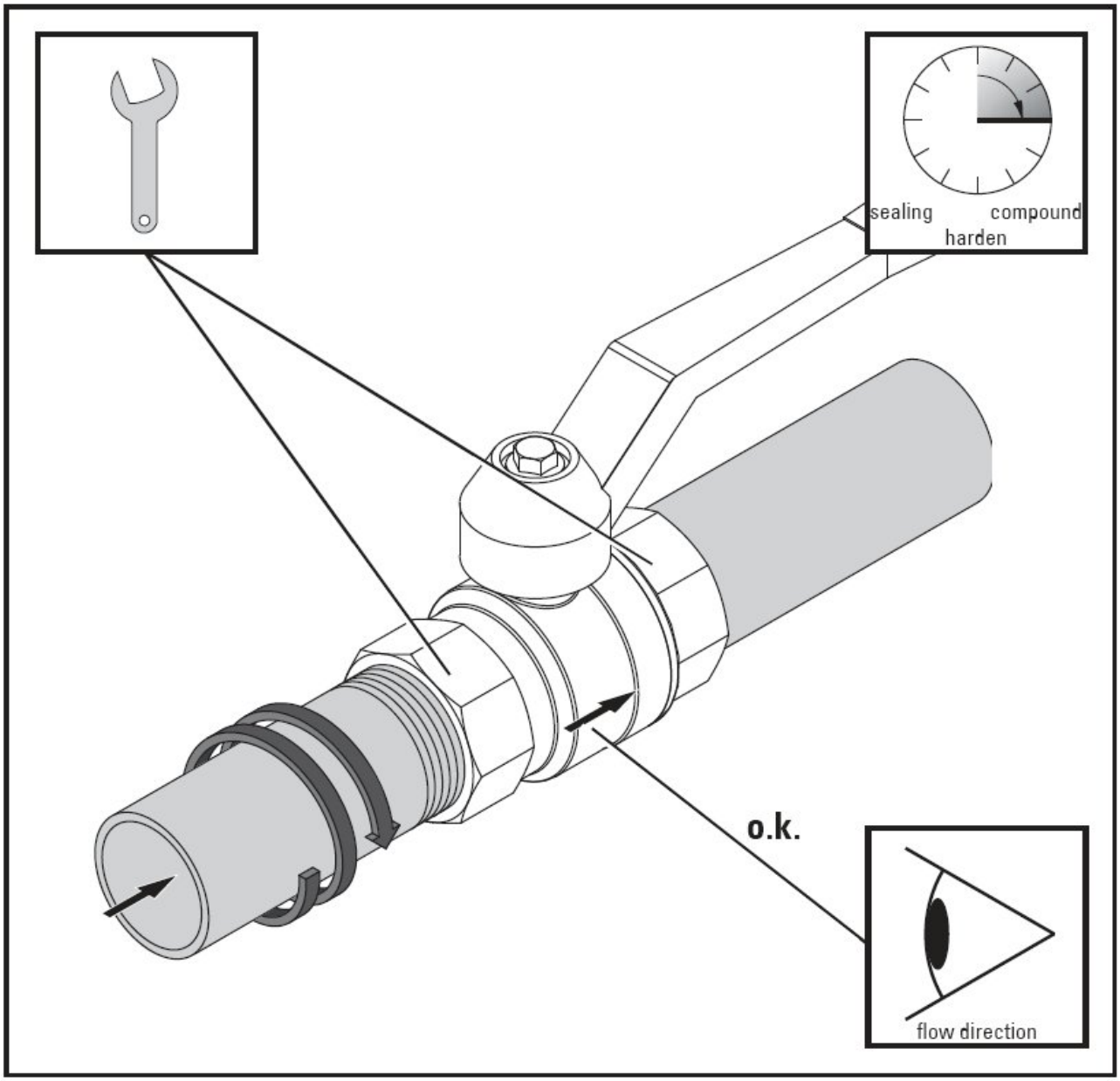

Mounting with flanged connection

In the following discription we assume that you have mounted the flanges at the end of the pipes and the ball valve (welded flanges) and they are cooled down.

- Insert the ball valve and the flange sealings between the flanges.
- Align the flange borings und put fit screws through the borings.
- Put fit nuts on the screws and tighten them equally and crossvice. Observe the required and the max. torque of the ball valve, the flanges, the flanges seals and the screws.
- Check the tightness of all connections.

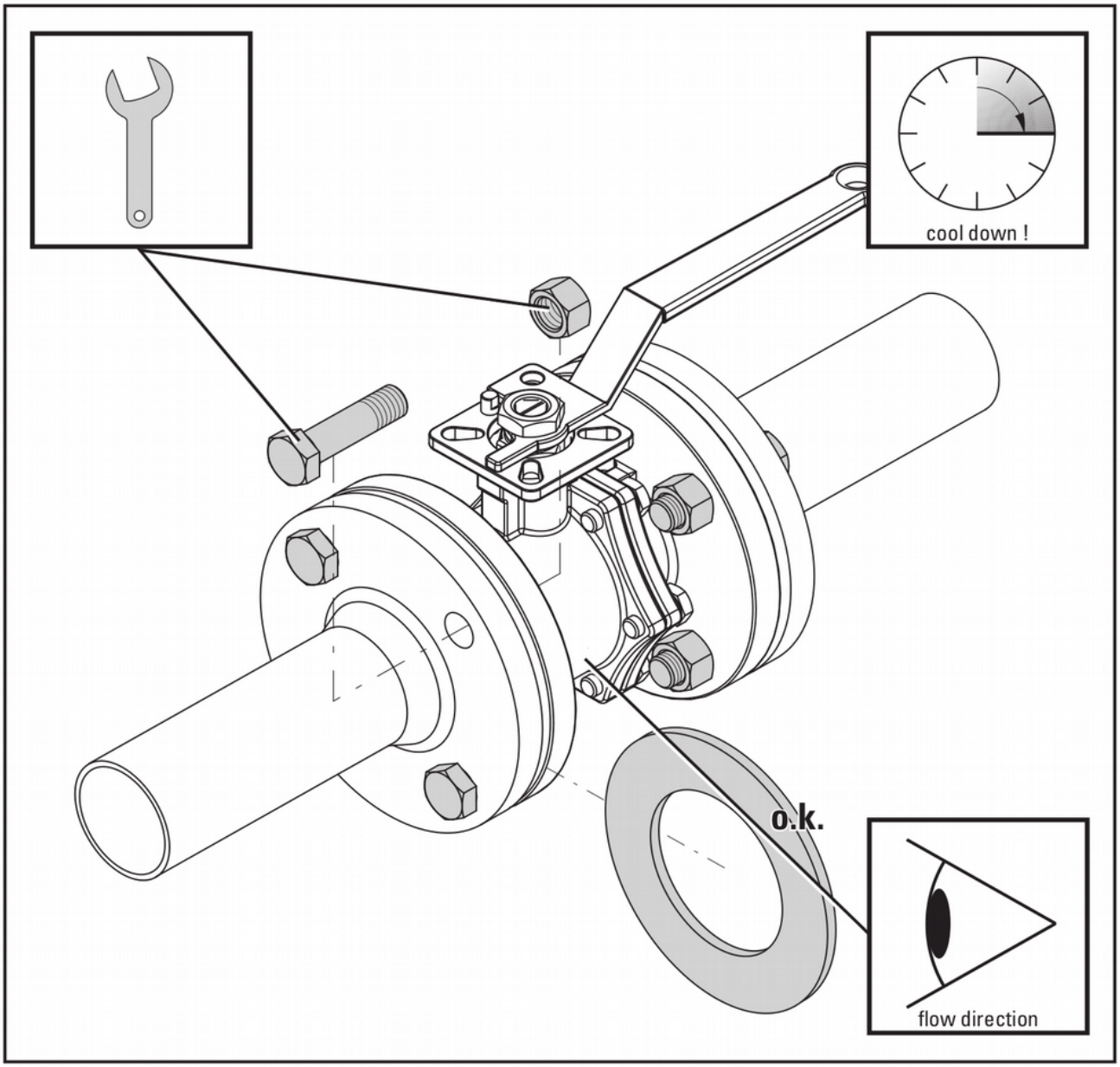

Operation

The ball valve will be open or close totally by using a handle or a pneumatic or electric actuator (option).
During the operation of the ball valve take care that there won`t be insert any objects or limbs into the armature. Heavy injuries or damages will be the consequence. If it is necessary you have to install a protective device.

Maintenance and Repairing

Safety instructions:

- Do not carry out any maintenances / repairs if the armature / valve will be under pressure.
- Observe that some valves / armatures are able to enclose the pressured medium e.g. the ball in the ball valve. You have to relieve the pressure in the pipes in which the armature / valve is mounted.
- Switch off pilot pressure and the power supply and relieve the pressure in the pipes.
- In case of defect in the armature/valve make contact to the supplier.
- If you ascertain a damage of the armature/valve, isolate the device from the mains. Please observe the safety advices.
- Do not mount, start or adjust the armature/valve if itself, the pipes or a mounted actuator will be damaged.
- After the maintenance or repair check the right function of the armature/valve and the tightness of the pipe connections.
- Also check the function of the accessories e.g. actuators, limit switches, etc.

On normal accounts the ball valve is maintenance free. In periodical turns the controlling of the function and the tightness should happen:

- check the tightness of the gland
- check the tightness of the ball seats

Readjusting of the gland

Depending on the version of the ball valve for decreasing tightness at the stem the gland could be readjust.

- For decreasing tightness at the stem the gland could be readjust.
- By keeping the nominal pressure you have to tighten up the screw of the gland until the tightness of the the gland will be restored
- After the readjusting the ball of the valve must be able to move slightly.
- At ball valves with spring forced sealings or o-ring sealings at the stem the readjustment isn`t necessary.

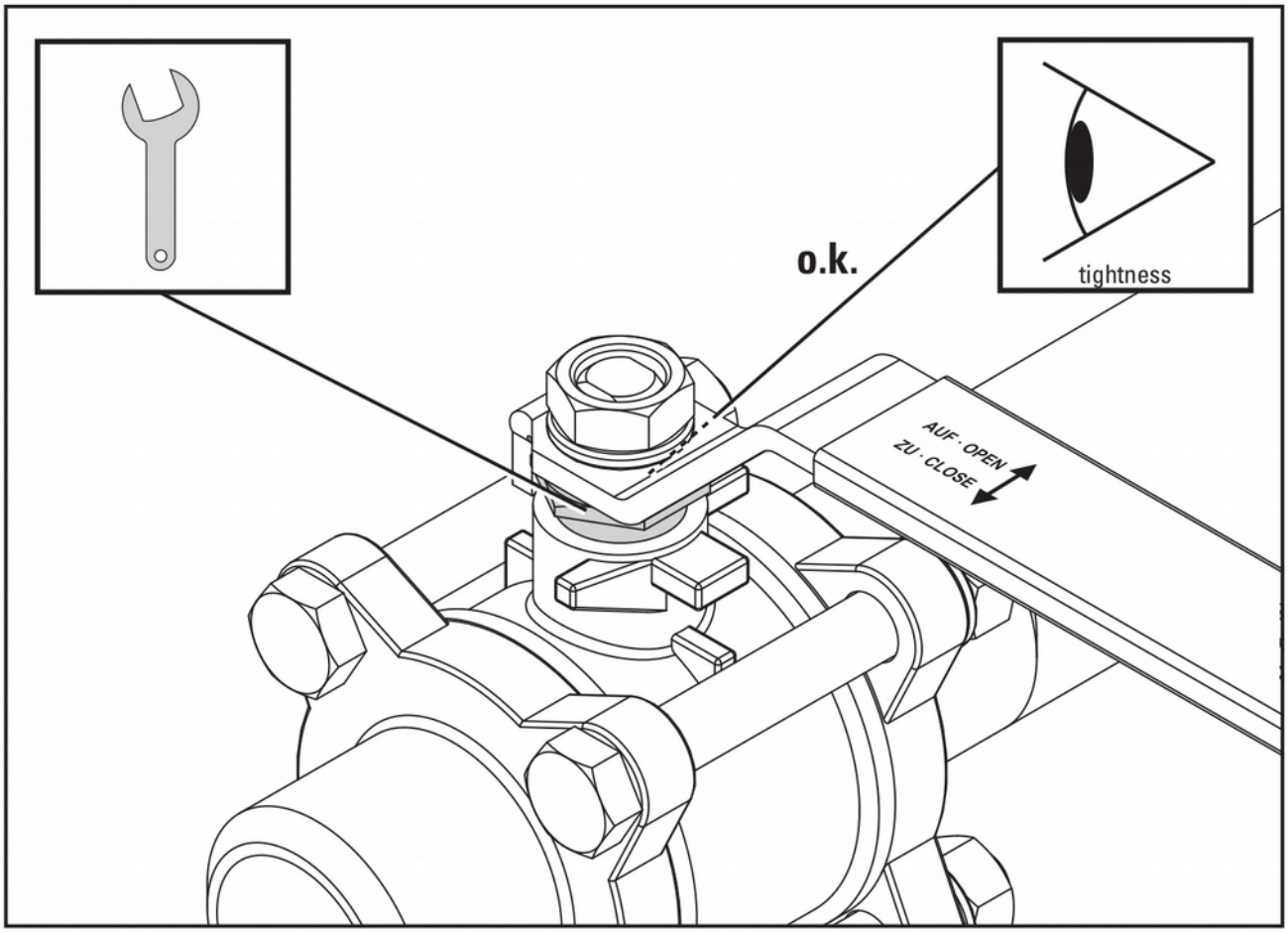

Exchange of the ball and the sealing

Ball valves in a multiple part design could be disassemble to exchange the seals and/or the ball.

For decreasing tightness the ball and/or the sealings of the ball valve could be exchange.

Corresponding to the wear of the parts exchange the sealings and the ball. By the replacement of the ball you should also exchange the sealing.

In the following description we assume, that your ball valve will be actuated by hand. If your ball valve will be actuated be a pneumatic or electric actuator, please also observe the operation and installation manual of the actuator.

- Cut off the media flow and relieve the media pressure.
- Keep ready some fit tanks to catch up leaking liquids.
- If it`s necessary remove the additional limt switches and gear boxes.
- Observe that ball valves could enclose medium inside the ball.
- Take the parts aside carefully. Place a mark on the body and the connection ends that you will be able to join the correct parts by a subsequent mounting.
- Remove the ball seals and the ball out of the body.
- Perhaps you have to turn the handle to remove the ball out of the body. Do not insert any limbs into the ball valve. Heavy injuries will be the consequences.
- Loosen the nut of the handle and take the handle and all discs and washers aside.
- Depending on the version of the ball valve loosen the nut on the stem or loosen the gland nut
- Remove the stem and all other sealings, washers and discs out of the body.
- Clean all parts and check them for damages.
- Throw away the old pieces by observing the appropriate demands and guide lines.

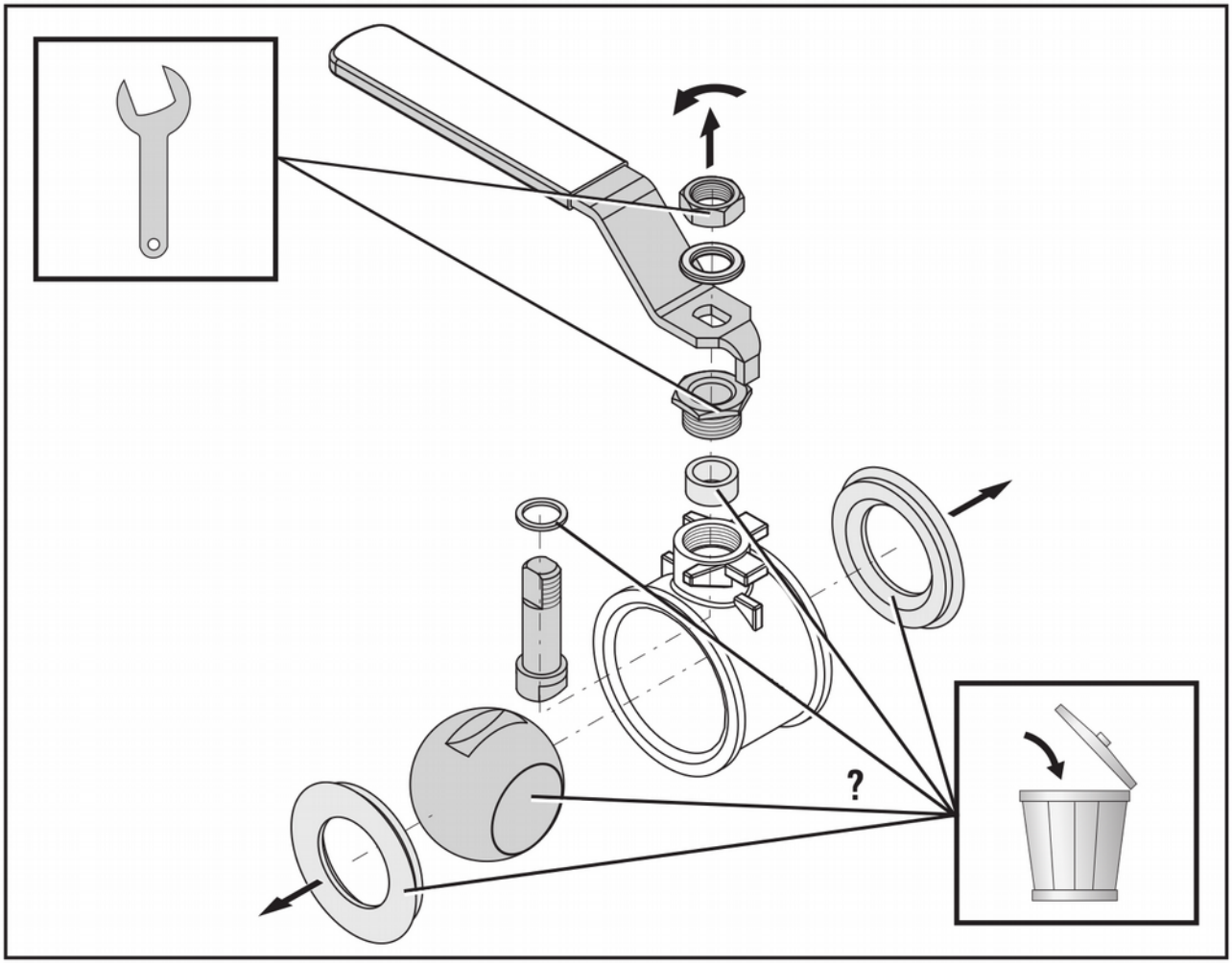

- Make the stem with the new sealings and discs complete.
- Insert the stem from the inside into the body.
- Depending on the version of the ball valve mount the other sealings, discs and spring washers at the stem, and screw the nut or the gland nut onto the stem.
- Insert the ball into the body. The dihedral of the stem must engage in the grove of the ball. If need be you have to turn the stem.
- Put the handle onto the stem. Observe the correct function of the limit switches and take care that the handle and the boring of the ball will align.
- Fix the nut of the handle onto the stem and tighten it.
- Put the ball sealings and the ball into their seats at the center part of the ball valve. Observe, that you didn´t drop the sealings or the ball.
- Before mounting the center part clean the connection ends at the end of the pipes.
- Move the center part of the body between the connection ends. If need be arrange the center parts to the correct connection ends.
- Insert the screws into the borings of the connection ends. Tighten the nuts equally and crosswise. Observe the max. torque of the screws.
- Check the function of the ball valve.
- Check the tightness of all the connections.

Multiple part ball valve with flanged connection:

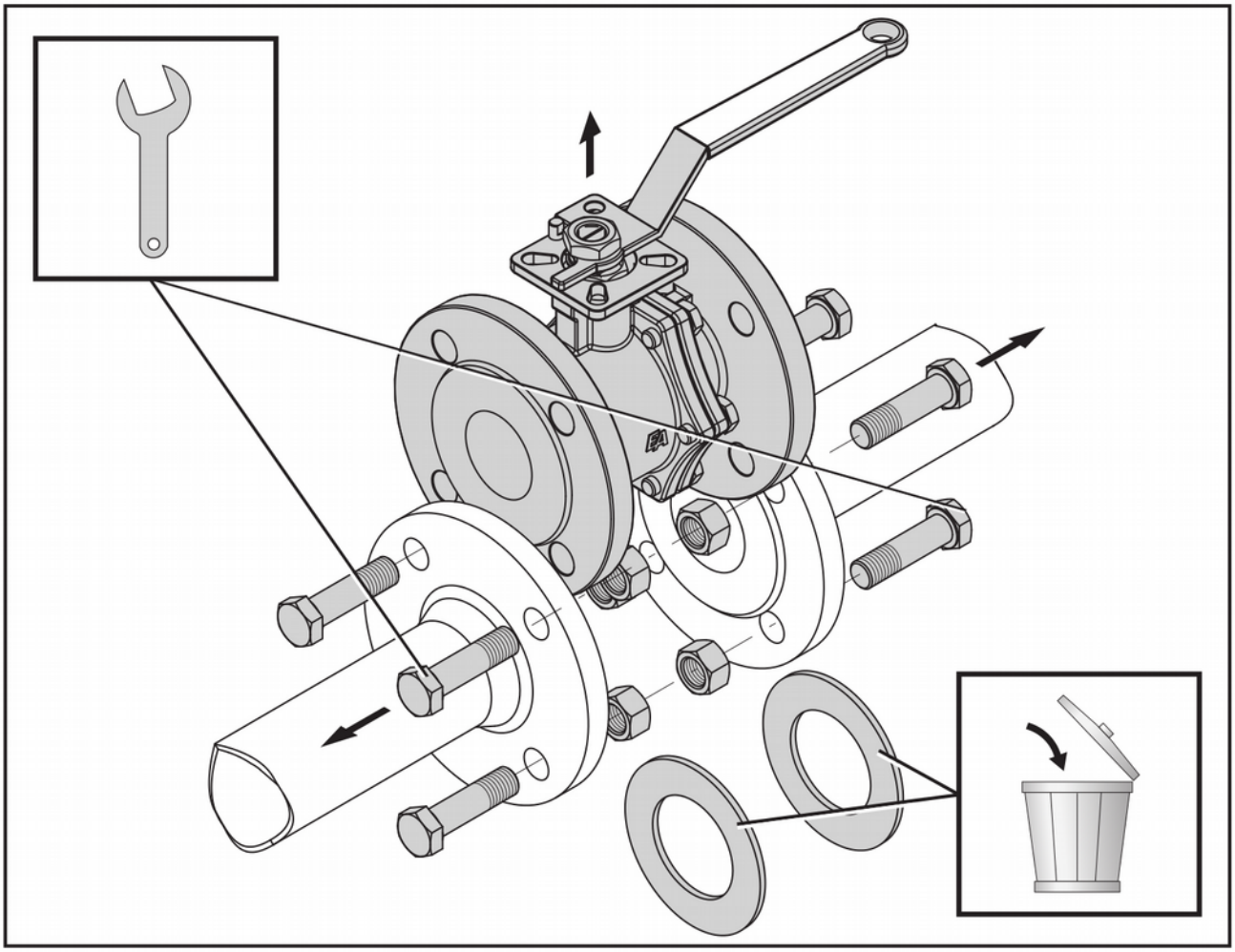

- Perhaps you have to turn the handle to remove the ball out of the body. Do not insert any limbs into the ball valve. Heavy injuries will be the consequences..
- Remove the second ball sealing.
- Loosen the nut of the handle and take the handle and all discs und washers aside.
- Depending on the version of the ball valve loosen the nut on the stem or loosen the gland nut
- Remove the stem and all other sealings, washers and discs out of the body.
- Clean all parts and check them for damages.
- Throw away the old pieces by observing the appropriate demands and guide lines.

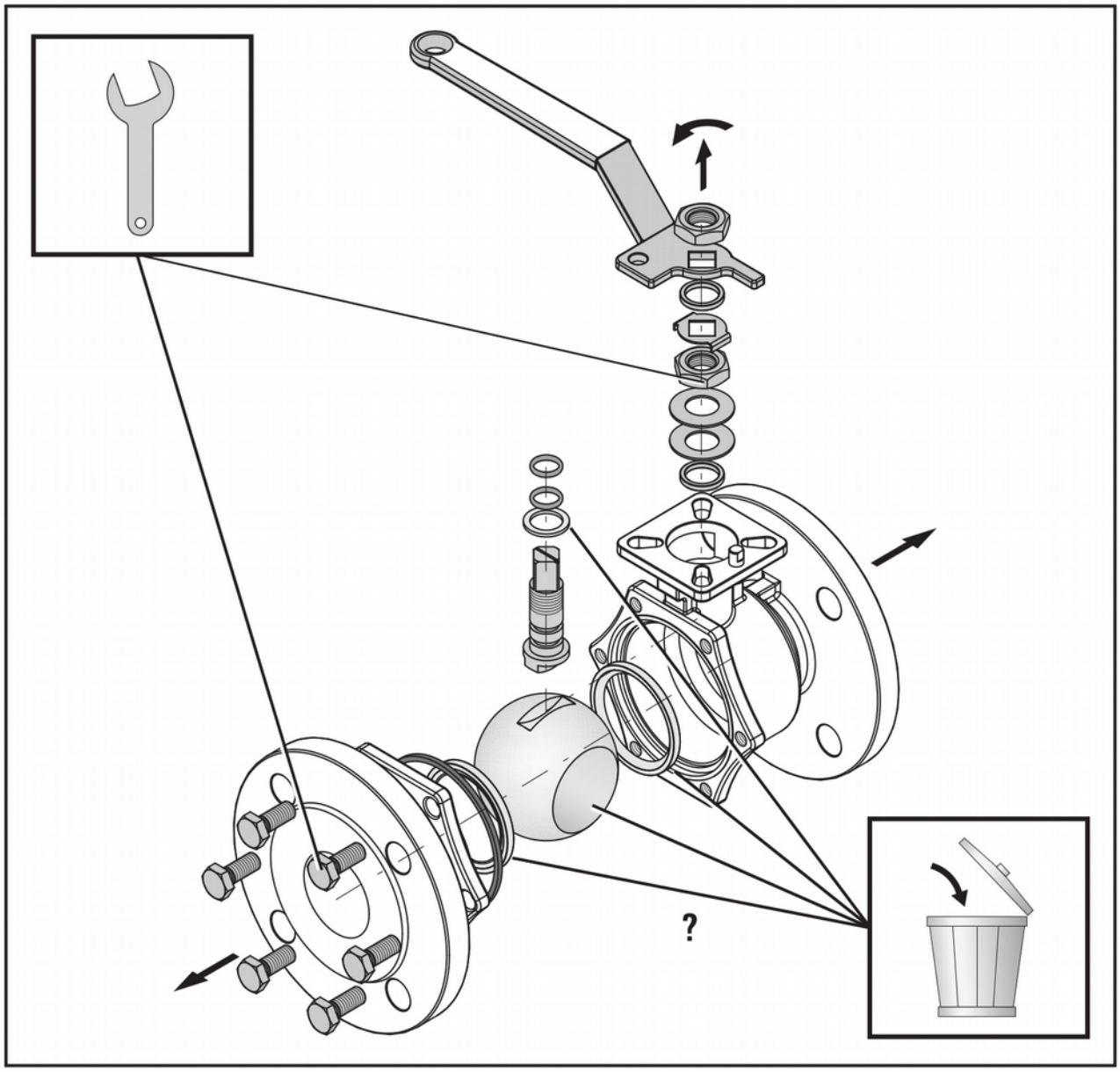

- Make the stem with the new sealings and discs complete.
- Insert the stem from the inside into the body.
- Depending on the version of the ball valve mount the other sealings, discs and spring washers at the stem, and screw the nut or the gland nut onto the stem.
- Place the first ball seal into the seat in the body.
- Insert the ball into the body. The dihedral of the stem must engage in the grove of the ball. If need be you have to turn the stem.
- Place the second ball seal into the seat in the body.
- Assemble the ball valve. Depending on the version of the ball valve:
  • you have to join the parts of the body together and to screw them up with the fit screws; or
  • you have to screw up the screw joint with the body.
- If need be attach the different parts of the boby.
- Put the handle onto the stem. Observe the correct function of the limit switches and take care that the handle and the boring of the ball will align.
- Fix the nut of the handle onto the stem and tighten it.
- Before mounting the center part clean the connection ends at the end of the pipes.
- Insert the ball valve with new flange sealings between the flanges.
- Align the flange borings und put fit screws through the borings.

- Put fit nuts on the screws and tighten them equally and crossvice. Observe the max. torque of the screws.
- Check the function of the ball valve.
- Check the tightness of all the connections.

SKG01

Ball Valve with Threaded Connection, Manual Operated

- **2- or 3- way-version with L- or T-bore**
- **process connection from 1/4“ to 4“**
- **max. pressure: until PN 63**
- **max. medium temperature: until 180 °C**

Description:

The ball valves of the model series SKG01 are appropriate to shut off the flow of several media. Because of the used materials as PTFE, FKM, brass or stainless steel they are consistent against chemical aggressive, gaseous, liquid, semi-liquid, dusty and polluted media.
The 2/2 way valve are a 2 parted threaded body-design with full bore. The 3/2 way valves made of brass are a threaded 4 parted body-design with full bore and flange plate. The 3/2 way valves made of stainless steel consist of a threaded 4 parted body-design with a reduced bore. All 3/2 way valves come with a L- or T- bore.

Typical applications:

The materials and the wide range of permitted pressure and temperature allow their use in most difficult processes e.g. in the chemical and petrochemical industry, in metal- and vessel- construction or in the climate, ventilation- and heating-engineering.

PKP Prozessmesstechnik GmbH
Borsigstr. 24 • D-65205 Wiesbaden
+49 (0) 6122-7055-0 • +49 (0) 6122 7055-50
info@pkp.de • www.pkp.de

Models:

SKG01.1-3: 2/2-way version,
female thread on both side,
female/male, male thread on both sides

SKG01.4-5: 3/2-way version,
female thread on both side,
with L - or T - bore

Materials:

SKG01.1-3: nickel plated version
valve: brass hard chrome plated
gasket: PTFE / FKM.

SKG01.1: stainless steel version 1.4408
valve: 1.4401
gasket: PTFE glass fibre

SKG01.4-5: made of brass or st. steel 1.4408
valve: brass hard chrome plated bzw.
stainless steel 1.4401
gasket: PTFE / FKM

Technical Data:

Brass version 2/2-way

nominal pressure:* up to 3“: PN 25
4“: PN 20

max. medium temperature: –20 °C…120 °C

Stainless steel version 2/2-way

nominal pressure:* up to 1“: PN 63
from 1 ¼“: PN 40

max. medium temperature: –30 °C…180 °C

Brass version 3/2-way

nominal pressure:* up to ¾": max. 30 bar,
1", 1 ¼ : PN 20
1 ½", 2": PN 16

max. medium temperature: –20 °C…160 °C

Stainless steel version 3/2-way

nominal pressure:* PN 63

max. medium temperature: –30 °C…180 °C

* until 80 °C operating temperature, pressure rating at higher temperatures on request

Order Code:

Order number: SKG01. | G. | 1. | 1. | 15. | 0

Ball valve with threaded connection, manual operated

Models:
1 = 2/2 way, female / female
2 = 2/2 way, female / male
3 = 2/2 way, male / male
4 = 3/2 way L-bore
5 = 3/2 way T-bore

Switching positions:
0 = without switching position (2/2-way only)
1-7 = 3/2-way only, see table „switching positions"

Materials:
1 = brass
2 = stainless steel (SKG01.1/4/5 only)

Process connections:
1 = 1/4" (not as 3/2-way st. steel available)
2 = 3/8" (not as 3/2- way st. steel available)
3 = 1/2"
4 = 3/4"
5 = 1"
6 = 1 1/4"
7 = 1 1/2"
8 = 2"
9 = 2 1/2" (not as 3/2- way available)
10 = 3" (not as 3/2- way available)
11 = 4" (not as 3/2- way available)

Options:
0 = without
1 = please specify in plain text

Dimensions:

Process-connection	Length [mm]					
	SKG01 .1 brass	SKG01 .1 st. steel	SKG01 .2 brass	SKG01 .3 brass	SKG01 .4 and .5 brass	SKG01 .4 and .5 st. steel
1/4“	44	50	45	50	67	-
3/8“	45	60	45	51	67	-
1/2“	56	75	56	59	77	79
3/4“	64	80	62	69	87	88
1“	74	90	72	80	105	105
1 1/4“	85	110	82	91	122	124
1 1/2“	98	120	95	104	139	134
2“	110	140	110	120	166	164
2 1/2“	134	186	-	-	-	-
3“	160	205	-	-	-	-
4“	186	240	-	-	-	-

Switching Positions:

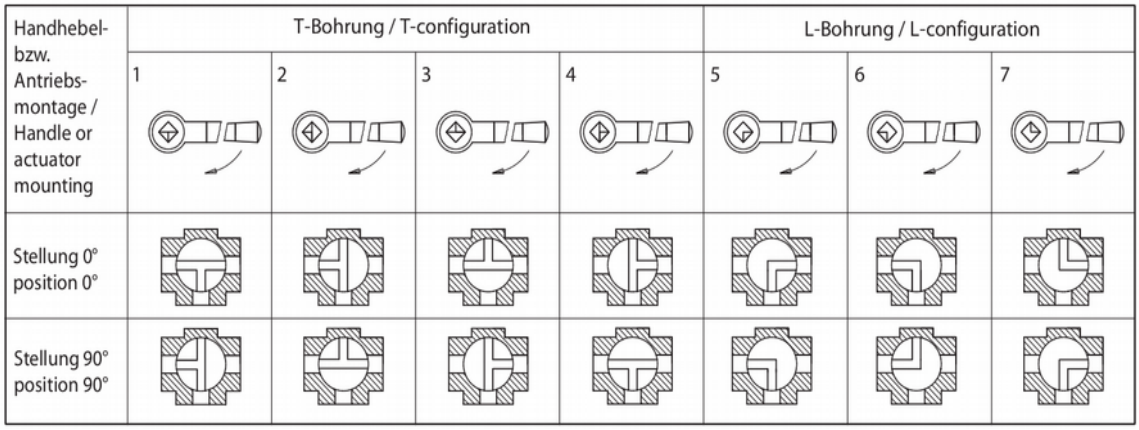

PKP Prozessmesstechnik GmbH
Borsigstr. 24 • D-65205 Wiesbaden
+49 (0) 6122-7055-0 • +49 (0) 6122 7055-50
info@pkp.de • www.pkp.de

SKG02

Ball Valve with Flange Connection, Manual Operated

- **2- way version**
- **standard or compact design**
- **nominal sizes DN 15 to DN 200**
- **pressure stages PN 16 or PN 40**
- **max. medium temperature: until 180 °C**

Description:

Ball valves of the SKG02 series are suitable for shutting off the flow of various media. Due to the materials used, such as PTFE, Viton, brass or stainless steel, they are resistant to chemically aggressive, gaseous, liquid, viscous, dusty and contaminated materials.

The standard series is a 2-part bolted body construction with full passage. The stainless steel version of the standard series is additionally lockable in the open and closed position. The compact series is a 1-part body construction with full passage.

Typical applications:

The permissible pressure and temperature ranges permit use in the most difficult processes, e.g. in the chemical and petrochemical industry, in metal and tank construction or in air-conditioning, ventilation and heating technology.

PKP Prozessmesstechnik GmbH
Borsigstr. 24 • D-65205 Wiesbaden
+49 (0) 6122-7055-0 • +49 (0) 6122 7055-50
info@pkp.de • www.pkp.de

Models:

Compact: full pass, with threaded holes and with ISO 5211 flange plate for actuator mounting.

Attention: from DN 40 as double flange version (stainless steel only)

Standard: full pass, drilled Face-to-Face length according to DIN 3202 F4 / F5 flange plate according to ISO 5211 for direct mounting.

Materials:

Standard: cast iron housing (GG25)
valve: brass hard chrome plated
gasket: PTFE, NBR

stainless steel housing 1.440
valve: stainless steel 1.4408
gasket: PTFE, FKM

Compact: steel housing
valve: brass hard chrome plated
gasket: PTFE / FKM

stainless steel housing 1.4408
valve: stainless steel 1.4401
gasket: PTFE, FKM

Dimensions:

Process connection	Length [mm]		
	SKG02.1-3 steel / st. steel	SKG02.4.1 GG25	SKG02.4.3 st. steel
DN 15	35	-	115
DN 20	40	-	120
DN 25	46	125	125
DN 32	54	130	130
DN 40	63	140	140
DN 50	82	150	150
DN 65	103	170	170
DN 80	122	180	180
DN 100	152	190	190
DN 125	196	200	325
DN 150	232	210	350
DN 200	317	400	400

Order Code:

Order number: SKG02. 1. 2. 2. 1

Ball valve with flange connection

Models:
1 = compact, PN 16 (only in steel or st. steel)
2 = compact, PN 40 (only in steel or st. steel)
3 = compact, ANSI 150 lbs
(only in stainless steel up to DN 100)
4 = standard (only in GG25 or stainless steel)

Materials:
1 = cast iron, GG25, PN 16
2 = steel
3 = stainless steel

Nominal sizes:
1 = 15 (not available in GG25)
2 = 20 (not available in GG25)
3 = 25
4 = 32
5 = 40
6 = 50
7 = 65
8 = 80
9 = 100
10 = 125 (not available in steel / st. steel PN 40 (compact))
11 = 150 (not available in steel / st. steel PN 40 (compact))
12 = 200 (not available in steel / st. steel PN 40 (compact))

Options:
0 = without
1 = please specify in plain text

Technical Data:

Compact design
nominal pressure:* PN 16, PN 40, 150 lbs
max. medium temperature: –30…160 °C

Standard design
nominal pressure:* PN 16, PN 40
max. medium temperature: –20 °C…120 °C

Stainless steel version:
nominal pressure:* PN 16 , PN 40
max. medium temperature: –30 °C…180 °C

* up to 80 °C operating temperature, pressure resistance at higher temperatures on request